B-606-9A

(Use with B-606-9-3 and -4)

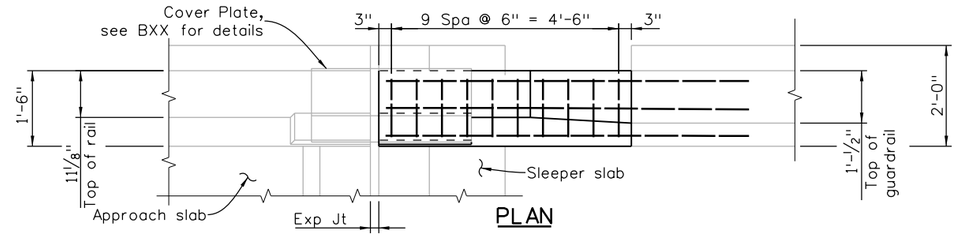

PLAN

Designer/Detailer:
Revise dimensions and reinforcing rebar with a 3/4" overlay.
See the dimensions in the box.

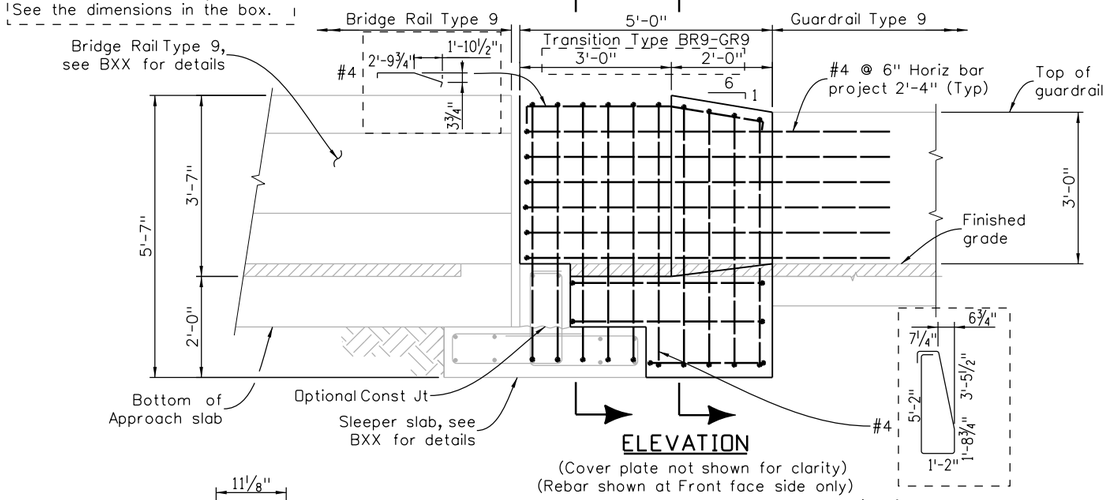

ELEVATION

(Cover plate not shown for clarity)
(Rebar shown at Front face side only)

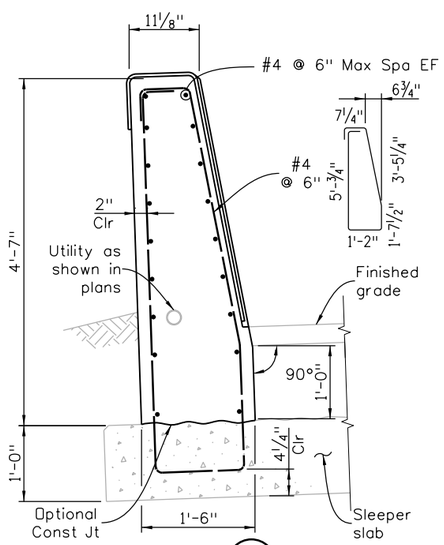

SECTION A

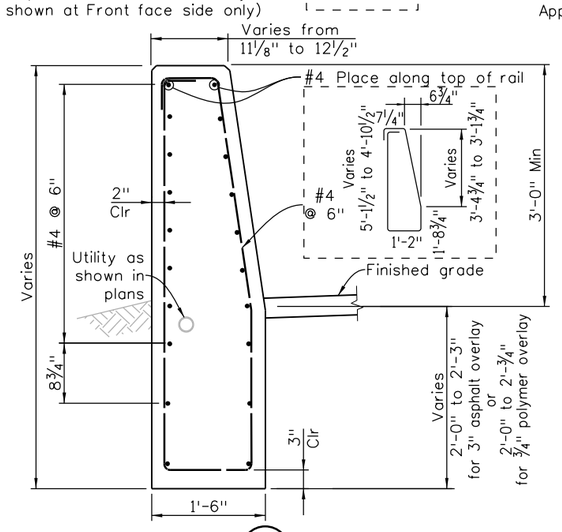

SECTION B

NOTES:

1. Payment will be made under item 606, Transition Type BR9-GR9, consisting of Concrete Class DF, reinforcing steel, and concrete sealer. Excavation and backfill will not be paid for separately, but shall be included in the work.
2. Cover plate shall be included in cost of Bridge Expansion Device.
3. Transitions shall be constructed tapering perpendicular to bridge cross slope (Bridge rail side beyond coverplate) to plumb (3G/3H side). Vertical dimensions are perpendicular to the longitudinal roadway grade.
4. The top and inside face of the transition rail shall receive a coating conforming to Item 515, Concrete Sealer, compatible with the concrete coating/stain shown in the plans.
5. Concrete and reinforcing steel shall conform to the requirements of Sections 601 & 606 and 602 respectively unless otherwise noted.
6. All longitudinal reinforcement shall terminate with standard stirrup hooks as shown. Rotate or adjust reinforcing hooks to avoid interferences as required.

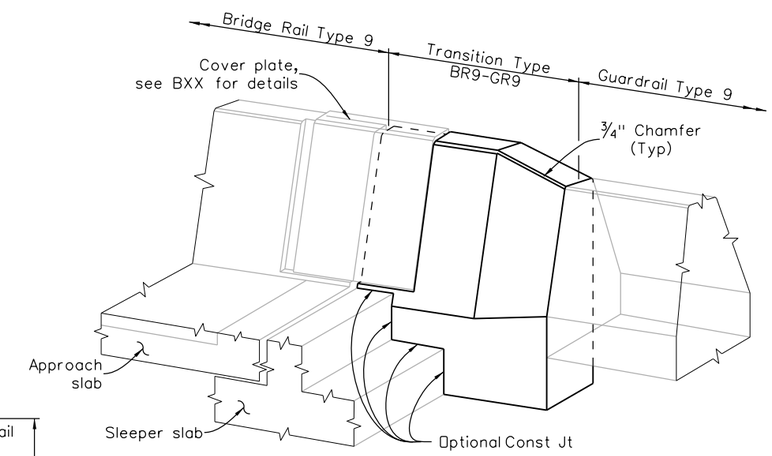

ISOMETRIC VIEW

DESIGN DATA:

Concrete:
Class DF — f'c = 4.5 KSI

Reinforcing Steel: — fy = 60 KSI Min

All reinforcing bends shown shall use a 4D pin diameter.

Designer/Detailer: Any changes to barrier shape or reinforcing shall be approved by Staff Bridge.

INFORMATION ONLY

Description	Unit	Quantity
Concrete Sealer	SY	3.2
Concrete Class DF	CY	1.2
Reinforcing Steel (Epoxy Coated)	LB	167

Note: Reinforcing dimensions and quantities given for 3" overlay

Revision Dates						
12/19	12/19	1/20	5/22	7/22	3/23	9/24	11/24

INITIALS	DESIGN	DATE	DETAIL	DATE	QUANTITY	DATE
By						
Checked By						

All seals for this set of drawings are applied to the cover page(s)

Print Date: $DATE$
File Name: Sheet_B-606-9A.dgn
Horiz. Scale: None — Vert. Scale: As Noted
Unit Information — Unit Leader Initials

Sheet Revisions

Date:	Comments	Init.

Colorado Department of Transportation
2829 West Howard Place, 3rd Floor
Denver, CO 80204
Phone: 303-512-5989
Phone: FAX: 303-757-9197
Staff Bridge Branch

Initials

As Constructed
No Revisions:
Revised:
Void:

TRANSITION TYPE BR9 - GR9
HEADER VERSION

Designer: XXXXXXXX
Detailer: XXXXXXXX
Sheet Subset: BRIDGE
Structure Numbers: X-XX-XX, X-XX-XX
Subset Sheets: BXX of XXX

Project No./Code
Project Number
Code
Sheet Number

$PLOT_INFO$