–STATIC SIGN MOUNTING BRACKETS–

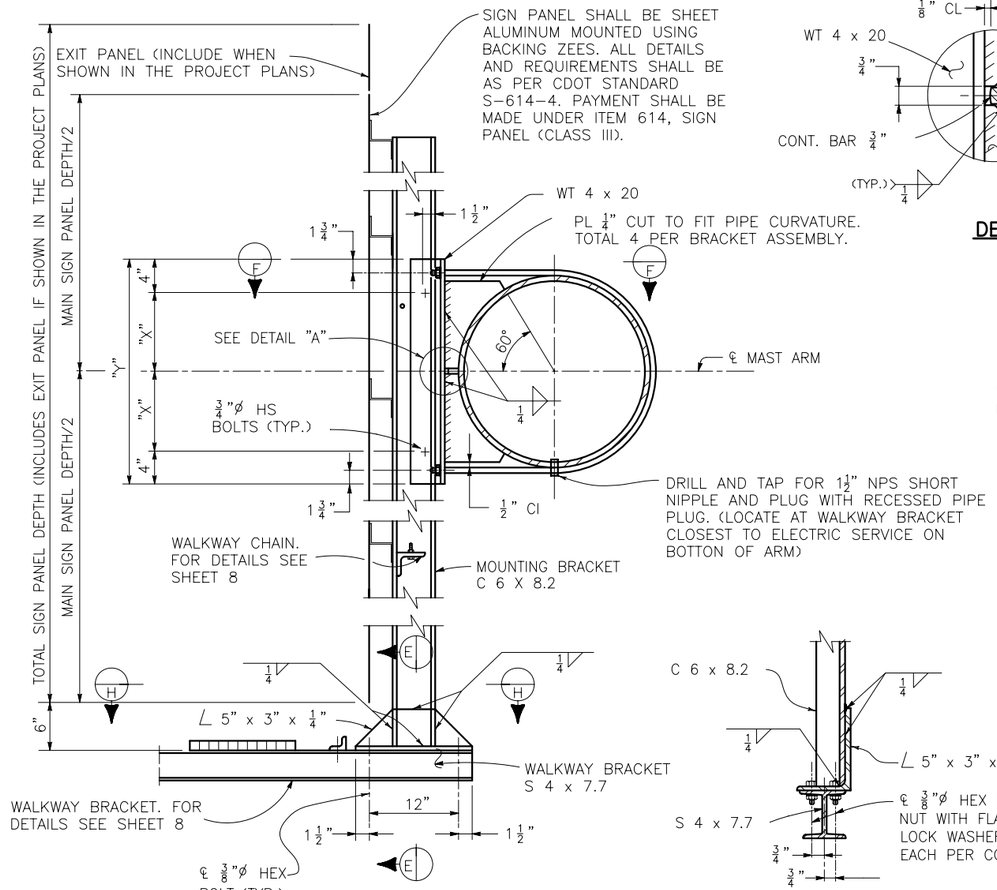

SINGLE SIGN PANEL

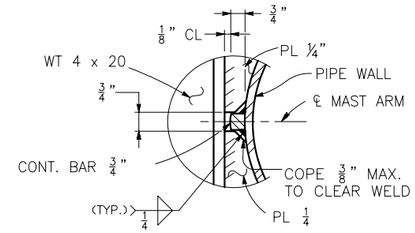

DETAIL A

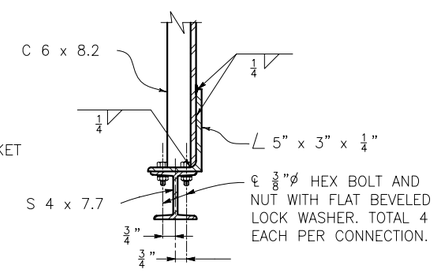

SECTION E

MOUNTING BRACKET ASSEMBLY DETAILS

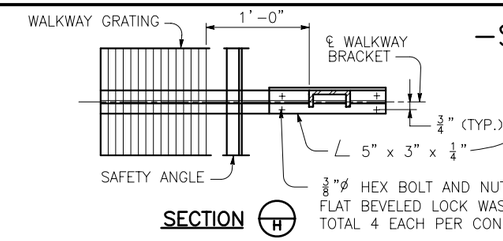

SECTION H

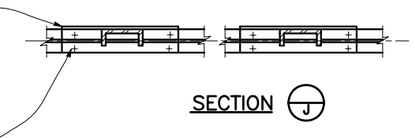

SECTION J

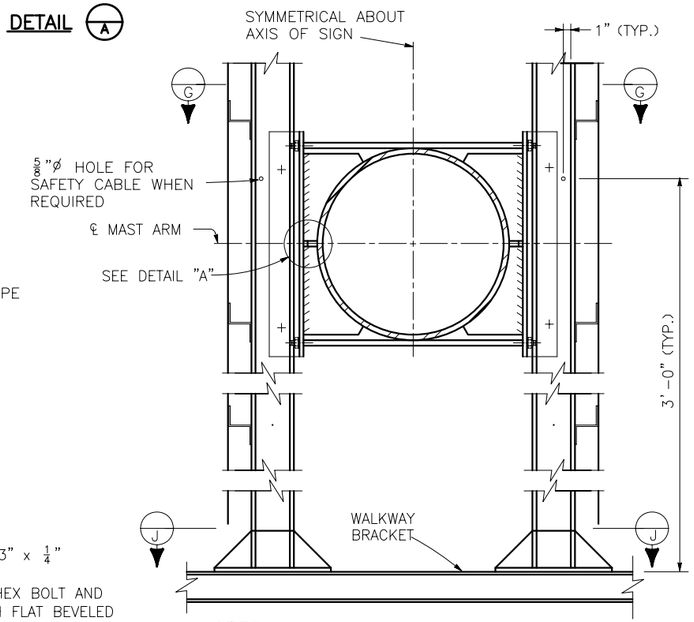

NOTES

FOR DETAILS NOT SHOWN OR NOTED SEE "SINGLE SIGN PANEL". ASSEMBLY DETAILS SHOWN APPLY TO TANGENT PORTION OF PIPE ONLY. FOR MOUNTING BRACKET ON ELBOW SEE DETAIL "B".

BACK-TO-BACK SIGN PANELS

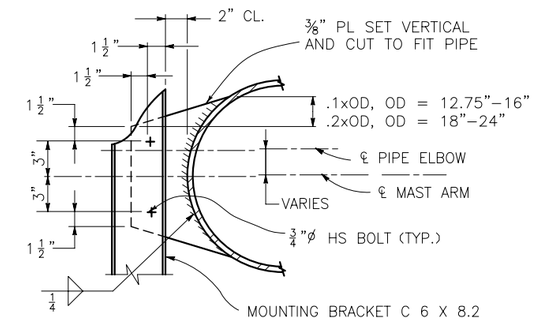

DETAIL B

MOUNTING BRACKET ON ELBOW

PIPE OUTSIDE DIAMETER (IN.)	DISTANCE "X" (IN.)	DISTANCE "Y" (IN.)
12.75	4 1/2	17
14	5	18
16	6	20
18	7	22
20	8	24
24	10	28

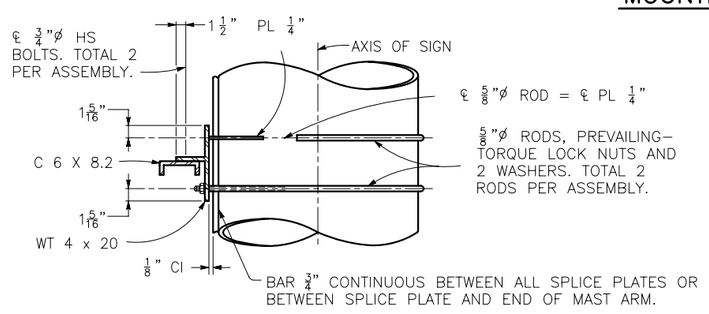

VIEW F

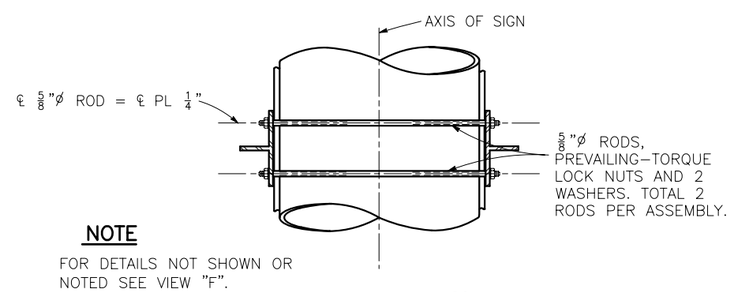

NOTE

FOR DETAILS NOT SHOWN OR NOTED SEE VIEW "F".

VIEW G

Computer File Information	
Creation Date: 07-04-06	Initials: JSV
Last Modification Date: 07-04-06	Initials: RO
Full Path:www.dot.state.co.us/DesignSupport/	
Drawing File Name: S614500414.dwg	
CAD Ver.: ACAD 2004	Scale: Not to Scale Units: English

R-X

Sheet Revisions	
Date:	Comments

Colorado Department of Transportation
4201 East Arkansas Avenue
Denver, Colorado 80222
Phone: (303) 757-9543
Fax: (303) 757-9820
Safety & Traffic Engineering Branch KCM

MONOTUBE OVERHEAD SIGNS

Issued By: Traffic Engineering Unit July 4, 2006

STANDARD PLAN NO.

S-614-50

Sheet No. 4 of 14