STRUCTURAL CAPACITY

POLICY	COMMENTARY

GENERAL

Allowable Stress Design (ASD) shall be used on all CDOT projects. Projects where steel and concrete are to be bid as alternates may be evaluated on an individual basis by the Staff Bridge Preconstruction Engineer for the possible use of Load Factor Design (LFD). Allowable Stress Design is recommended for off-system projects; however, Load Factor Design may be permitted if the local agency makes a formal request for its use. (C1)

The above policy applies where the AASHTO Standard Specifications provide the option of using either ASD or LFD. Where the option is not provided, the method required by the specifications shall be used. (C2)

For temporary loads with a probable one time application, LFD will be allowed. This will not apply to the seismic, wind, or 100 year stream condition loads on the completed structure. In addition, this will not apply to vehicle overloads. (C3)

Ultimate strength capacities, and plastic analysis, will be allowed for investigations made to identify non-redundant or fracture critical members. The members shall be sufficiently compact and braced to develop the final stress conditions assumed.

As a minimum, structures shall be designed to carry the load combinations specified in Article 3.22 of the AASHTO Standard Specifications.

C1: CDOT has historically used Allowable Stress Design. The current policy statement given here is taken from a April 30, 1986 memorandum from the Staff Bridge Engineer. With the ongoing development, and probable future acceptance, of the AASHTO Load and Resistance Factor Design Standard Specifications, Load Factor Design may eventually be phased in by CDOT. Until that time, Allowable Stress Design will continue to be used.

C2: The flexural strength checks for prestressed concrete design, and the design for negative moment over piers in prestressed precast girders made continuous, are examples of where Load Factor Design is to be used per the AASHTO specifications.

C3: Checking a pier for construction loads while the superstructure is being placed is an example of anticipated single occurrence loading where the use of Load Factor Design may be appropriate. Checking a pier for stability under the 500 year scour condition is another example.

C4: It is not possible for structural designers to anticipate all the loads that will occur during the fabrication, shipping, handling, and construction (as applicable) of structural members. However, as a minimum, completed members in their final location need to be designed for the loads they will probably receive under normal construction practices.

Generally, design engineers leave contractors free to select the methods of construction.

POLICY	COMMENTARY

CONSTRUCTION

Each member of a structure, once the member itself is complete and in place, shall have adequate elastic strength and stability to carry all anticipated construction loads that would occur during the remaining normal, or specified, construction phases. Members that cannot do this without falsework, except wet concrete members, shall be clearly identified in the contract documents. (C4)

SEISMIC

All structures shall be designed in accordance with the current AASHTO Standard Specifications for Seismic Design of Highway Bridges. (C5)

The allowable overstress (for Allowable Stress Design) and load factors (for load factor design) to use with the Seismic Performance Category A (SPC A) superstructure to substructure connection design force shall be consistent with the allowable overstress and load factor values given for SPC B.

SUPERSTRUCTURE BUOYANCY

For structures over waterways, provisions shall be made for the attachment of the superstructure to the substructure to prevent displacement of the superstructure due to hydraulic forces during flooding. Measures to allow entrapped air to escape, thereby decreasing buoyancy, should also be considered as necessary.

The contractor is then responsible for the integrity of the structure associated with the methods used. However, the design engineer needs to identify aspects of the structure that clearly require special considerations above and beyond typical construction practices.

Additionally, designers must make sure their structures are economical from a constructability standpoint. The means for providing adequate structural support during construction, and any uncertainties or risks contained in doing so, can be very expensive. If the support provided by the contractor has problems, the potential delays and legal claims are additional expenses to the project. It is counterproductive to carefully design the completed structure for economy while ignoring potential construction problems.

C5: As of the 1991 AASHTO Interims, all of Colorado is in Seismic Performance Category A (SPC A) with a maximum acceleration coefficient of 0.025. Designing the superstructure to substructure connections for a horizontal force equal to 20% of the dead load, and satisfying the minimum support lengths, are the only AASHTO design requirements for this category. Where the Category A superstructure to substructure design force appears too conservative, the Commentary to the AASHTO specification recommends using SPC B analysis and design procedures.

COLORADO PERMIT VEHICLE

POLICY

The axle weights and axle configuration shown below represent the Colorado Permit Vehicle. This vehicle is used to represent the maximum permit overloads allowed by CDOT on state highways. It is to be used for the AASHTO Group IB load case. It is a moving live load and is to be evaluated at the OPERATING level. The same live load distribution factors, or number of lanes loaded, and impact factors used with the HS-25 truck for checking the Group I load case shall be used with the Permit Vehicle for checking Group IB.

Deck slabs and other elements whose designs are governed by the HS-25 wheel load do not need to be checked for the Colorado Permit Vehicle.

The preferred method of assuring compliance with this provision is by providing an operating rating for the permit vehicle on the Bridge Rating Summary Sheet, see the *CDOT Bridge Rating Manual.*

COMMENTARY

To provide an indication of when this vehicle governs the design, a table is provided showing simple span moments and reactions for a vehicle 3/5 as heavy as this Permit Vehicle; for the HS-25 truck and lane loads; and for the military load.

In addition, rating values are shown for the HS live load (truck or lane load) equivalent to the Permit Vehicle at inventory and operating levels. The inventory value, based on load factor design criteria, is the HS live load equivalent to 3/5 of the Permit Vehicle. The operating value is the weight of the HS live load equivalent to the full Permit Vehicle. These equivalent rating values are the highest in the span for either moment or reaction, and considering the span either as

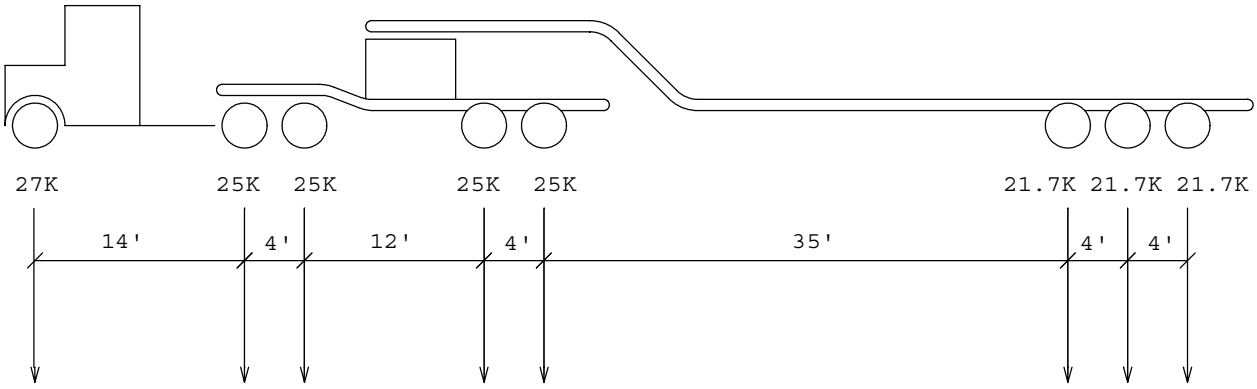

COLORADO PERMIT VEHICLE
192,000 LBS (96 Tons) on 8 Axles, 77 Feet Long

For load factor designs, AASHTO 10.57.3.1, slip critical joints, may be either evaluated with 3/5 of an HS25 truck or by using the permit vehicle.

simple, or fixed-end with a hinge at the center, as shown below.

Considering the span as fixed-end with a hinge at the center is a conservative approximation of usual negative moment conditions. Typical span ratios do not provide stiffness' that approach the fixed end condition. In addition, with typical span lengths, the single permit vehicle does not simultaneously load adjacent spans very effectively to produce maximum negative moment. Consequently, the permit vehicle will generally be less critical for negative moment than positive moment when checking a bridge that has been designed with the HS25 lane load.

The inventory HS rating values (HS-23 etc.) are appropriate for load factor design. They are conservative for working stress design if the operating allowable stresses are significantly higher than inventory allowable stresses(30% or so) and the live load to dead load ratios are 1.0 or lower.

Regarding the following table:

- Impact is not included.
- The values are subject to modification for loading of multiple lanes and appropriate distribution factors per the AASHTO specifications.
- The inventory rating value is the HS truck or lane load equivalent to 3/5 of the Permit Vehicle, in terms of HS.
- The operating rating value is the HS live load equivalent to the full permit vehicle, in tons.

TABLE OF MAXIMUM SIMPLE SPAN MOMENTS AND END SHEARS (ONE LANE)

SPAN (ft)	MAX. POSITIVE MOMENT (kip-feet)				END SHEAR (kips)				HS RATING		
	3/5 PERMIT	HS-25 TRUCK	HS-25 LANE	INT. ALT.	3/5 PERMIT	HS-25 TRUCK	HS-25 LANE	INT. ALT.	INV (HS)	OPR (tons) TRK	OPR (tons) LANE
6	24	60*	37	36	20.0	40.0*	34.9	32.0	13	38	--
8	34	80*	51	54	22.5	40.0*	35.7	36.0	14	42	--
10	48	100*	66	77	24.0	40.0*	36.5	38.4	15	45	--
12	65	120*	82	100	26.0	40.0*	37.2	40.0	16	49	--
14	85	140*	99	123	27.9	40.0	38.1	41.1*	18	54	--
16	104	160*	116	147	29.3	45.0*	38.9	42.0	18	54	--
18	124	180*	134	171	30.4	48.9*	39.7	42.7	18	54	--
20	143	200*	152	194	31.2	52.0*	40.5	43.2	18	54	--
22	163	220*	172	218	32.7	54.5*	41.2	43.6	18	54	--
24	182	241	192	242*	35.0	56.6*	42.1	44.0	18	54	--
26	202	277*	214	266	36.9	58.5*	42.9	44.3	18	54	--
28	221	315*	236	290	38.6	60.0*	43.7	44.6	18	54	--
30	241	352*	259	314	40.0	62.0*	44.5	44.8	18	54	--
32	260	391*	282	338	41.3	63.7*	45.2	45.0	18	54	--
34	286	430*	307	361	42.4	65.2*	46.1	45.2	18	54	--
36	315	474*	332	385	44.2	66.6*	46.9	45.3	18	54	--
38	344	517*	359	408	45.9	67.9*	47.7	45.5	18	54	--
40	377	562*	385	432	47.4	69.0*	48.5	45.6	18	54	--
50	567	785*	531	552	53.2	73.1*	52.5	46.1	18	55	--
60	757	1009*	697	672	57.0	76.0*	56.5	46.4	19	57	--
70	948	1232*	884	792	59.8	78.0*	60.5	46.6	19	58	--
80	1138	1456*	1090	912	62.7	79.5*	64.5	46.8	20	59	--
90	1329	1686*	1316	1032	67.6	80.6*	68.5	46.9	21	63	--
100	1569	1905*	1562	1152	72.3	81.6*	72.5	47.0	22	66	--
110	1856	2130*	1929	1272	76.2	82.4*	76.5	47.1	23	69	--
120	2144	2354*	2115	1392	79.5	83.0*	80.5	47.2	24	72	--
130	2431	2579*	2421	1512	82.2	83.5	84.5*	47.3	25	74	--
140	2719	2804*	2747	1632	84.6	84.0	88.5*	47.3	25	76*	--
150	3006	3025	3094*	1752	86.7	84.4	92.5*	47.4	25	78	76*
160	3294	3250	3460*	1872	88.4	84.7	96.5*	47.4	25	80	75
170	3582	3405	3846*	1992	90.0	85.0	100.5*	47.4	25	82	73
180	3870	3700	4252*	2112	91.4	85.4	104.5*	47.5	24#	83	72
190	4158	3855	4679*	2232	92.7	85.6	108.5*	47.5	24#	84	70
200	4445	4150	5125*	2352	93.8	85.7	112.5*	47.5	23#	85	69
220	5021	4600	6078*	2592	95.8	86.1	120.5*	47.6	22#	87	66
240	5597	5050	7110*	2832	97.4	86.5	128.5*	47.6	21#	88	63
260	6173	5500	8222*	3072	98.8	86.7	136.5*	47.6	20#	89	60
280	6749	5950	9415*	3312	99.9	87.0	144.5*	47.7	19#	90	57
300	7325	6400	10687*	3552	101.0	87.3	152.5*	47.7	18#	91	55
330	8189	7075	12746*	3912	102.3	87.5	164.5*	47.7	17#	92	51
360	9054	7750	14985*	4272	103.3	87.6	176.5*	47.7	16#	92	48
400	10206	8650	18250*	4752	104.5	87.9	192.5	47.8	15#	93	44

# Indicates that points in the span with less than maximum moments or shears may have effects equivalent to or as high as HS-25.

* Designates the controlling value for a span length for strength design.

3.3.1 New Structures

Exposed supporting elements that can be hit by errant vehicles or trains shall be designed for the CT impact load. Generally this will include pier columns, and non-redundant through type superstructure elements, such as thru trusses or thru arches. Due to the improbable coincidence of other loads, the analysis may be limited to the impact load and dead loads with a load factor of 1.0. (C1)

Concrete columns and compression members with a gross area greater than 2600 square inches with a minimum cross section thickness of 42 inches with minimum bonded well distributed flexural or column reinforcement in each exposed direction and with minimum stirrups or column tie transverse reinforcement need not be checked for CT loads. (C2)

Small members shall be checked for adequate load capacity. The minimum shear strength along the member shall be at least equal the applied shear from the CT load but not less than 160 kips. The shear strength need not exceed 400 kips at any point. Plastic analysis of the member may be used. (C3)

C1: While this does not happen often, collision from ships, trains and trucks is the second most common cause of bridge collapse.

C2: Concrete columns with an area greater than 2600 square inches meeting minimum longitudinal and transverse reinforcing requirements will normally have sufficient strength to resist the 400 kips collision load currently specified.

C3: Concrete columns and compression members with a cross section of less than about 450 square inches can not easily be designed to resist a 400 kips collision load. Larger concrete members with a cross section of less than about 1070 square inches may be capable of resisting a 400 kips collision load if the geometry is favorable (short members with fixity top and bottom) and they are heavily reinforced in flexure and shear. Concrete members with a larger cross section but less than 2600 square inches will normally need either a favorable geometry or greater than the minimum amounts of transverse and longitudinal reinforcing otherwise required.

The minimum shear capacity of 160 kips reflects shears that may occur very transiently due to inertial resistance of the column prior to plastic hinge formation. For example a pier restrained against translation and moment at the bottom, but unrestrained at the top would have a shear of 400 kips below the impact point and 0 kip above in a static analysis, but in the first instants of impact the inertia of the upper parts of the column and perhaps pier cap would provide lateral restraint above the impact point with an instantaneous distribution of the impact force closer to 240 kips below and 160 kips above the impact point.

Plastic analysis allows simple analysis by analyzing a non-redundant member with the moments at the top, bottom, and impact point set at the member flexural

POLICY	COMMENTARY

In unusual circumstances where members sufficiently strong to survive the impact load are impractical, the structure may be alternatively checked for adequate redundancy to resist collapse with the loss of the members that have inadequate strength to resist the impact load. This is done by analyzing the structure with the inadequate members missing with the structure subject to a load of at least 1.0 DL and 0.5 LL+I. Plastic analysis may be used. (C4)

For through type structures, such as thru trusses or thru arches, a 54 inch tall TL-5 barrier may be used to protect the through members.

3.3.2 Temporary Works

Temporary falsework towers that are within 30 feet of through traffic shall be able to resist a 400 kips impact load without collapse of the supported structure, or shall be protected by concrete barriers or rigid steel barriers with a minimum of 2 foot shoulder. The barriers shall have a minimum of 2 foot clear zone of intrusion from the tower to the traffic side top edge of the barrier. For speeds over 35 mph the barrier shall either be at least 54 inches tall or have 10 feet available for the zone of intrusion. If the speed is expected to be over 45 mph, or the ADTT exceeds 10,000 vehicles per day, or the through traffic is railroad or light rail traffic, then the barrier shall have the strength, stability and geometry required for a TL-5 barrier, except for cases where loss of the temporary tower would not cause collapse of the supported structure. (C5)

Guardrails protecting falsework towers or piers shall continue at full rail height for at least 30 feet each way from the tower and shall be configured with full height rigid barriers to prevent running around the rail end and hitting the tower from the opposite side of the rail. If ends transition into lower approach rails rather than crash cushions or barrels, that approach rail shall be a rigid rail type (such as Type 7) and shall not end for at least an additional 170 feet. (C6)

strength at those locations. Shears are found by the change in moments divided by distance between points.

Concrete filled steel tubes may be capable of resisting the 400 kips collision load with smaller sections than are required for concrete columns.

C4: A number of structures have survived the failure of columns, entire piers, or seemingly critical truss members without collapse. However, there is usually considerable difficulty to repair damage and the structure normally needs to be out of service for a considerable time for repairs, an issue for important structures. In addition, analysis of the alternate load paths can be difficult and lacks code guidance. Half the unfactored LRFD liveload approximates the liveload that can be expected within a slow response time up to a week.

C5: This controls the risk of collapse onto the interstate or railroad from collisions from errant vehicles. Falsework towers have been designed to resist collision loads in the past, although the typical reusable shoring is not capable of resisting collision loads of this magnitude. Eventually taller portable barrier schemes may be developed to protect these structures at low cost. Note that construction zones and lane shifts may increase the risk of errant trucks.

C6: This keeps any truck away from the temporary falsework and protects falsework towers from large debris from a head on impact between a vehicle and the end of the special barrier and prevents a vehicle mounting and straddling a barrier from reaching the tower or pier.

If the top of the barrier is smooth the length required to bring a high speed truck straddling the approach rail to a halt would be much longer. Type 3 barriers do not seem to slow straddling trucks much, but do lead the truck into the column. Methods for roughening the top of the approach rail should be considered.

POLICY	COMMENTARY

3.3.3 Existing Structures

When evaluating bridges for rehabilitation that may result in a potentially long remaining life, consider the risk of collapse or serious structural damage from future collision loads. If that risk is high consider adding mitigating measures such as strengthening columns or at risk members or improving approach rails protecting at risk members. (C7)

Placing a barrier in front of a pier or other obstacle should not in itself be considered as providing adequate protection. The barrier heights, offset distances, and transition guardrail treatments given in Subsection 3.3.2, the AASHTO specifications, and AASHTO Roadside Design Guide must be considered when evaluating risk of collapse or serious structural damage. Barrier height and offset distance should be optimized to help prevent high center of gravity vehicles from leaning over the barrier and into the pier or obstacle. Transition guardrail details should be optimized to help prevent vehicles from riding up on top of the barrier, or getting behind the barrier, and traveling into the pier or obstacle. (C8)

C7: It may be relatively economical and practical to strengthen a structure by adding or strengthening members, or providing or upgrading protection to prevent impacts if this work is concurrent with other widening or rehabilitation.

There is a Texas research project Funded, Contract/Grant Number: 9-4973, but not underway at this time on the issue of the CT load.

There is additional discussion and guidelines under development on this topic by CDOT Staff Bridge Branch.

C8: In addition to vehicles riding up on top of barriers, high center of gravity vehicles lean over the top of barriers. See the discussion in the *AASHTO Roadside Design Guide, 3rd edition, 2006, article 6.4.1.8, Concrete Barrier*.

The CDOT and other DOT’s place barrier around pier walls and columns to protect them from traffic impacts, but the presence of the railing does not guarantee that the substructure elements won't be damaged. In the last couple of years there have been several examples of these impacts on Colorado's highways:

Structure H-02-EM, which carries County Road 26.5 over I-70 in Grand Junction, was impacted by a tanker truck in August of 2007. From the Type 3 transition guardrail the truck rode up on top of the concrete barrier and into the pier taking out one of the two pier columns. See photos 3.3-1 & 3.3-2.

Structure L-18-BA, which carries S.H. 45 over I-25 south of Pueblo, was impacted by a tractor-trailer in December of 2005 where the median barrier actually launched the truck into the outside pier column. See photos 3.3-3 & 3.3-4.

Structure F-19-AH, which carries a ramp to S.H. 36 over I-70 near Strasburg, was impacted by a tractor-trailer in March of 2008. In this case, the truck went off the road behind the railing to take out the exterior column. See photo 3.3-5.

Photo 3.3-1

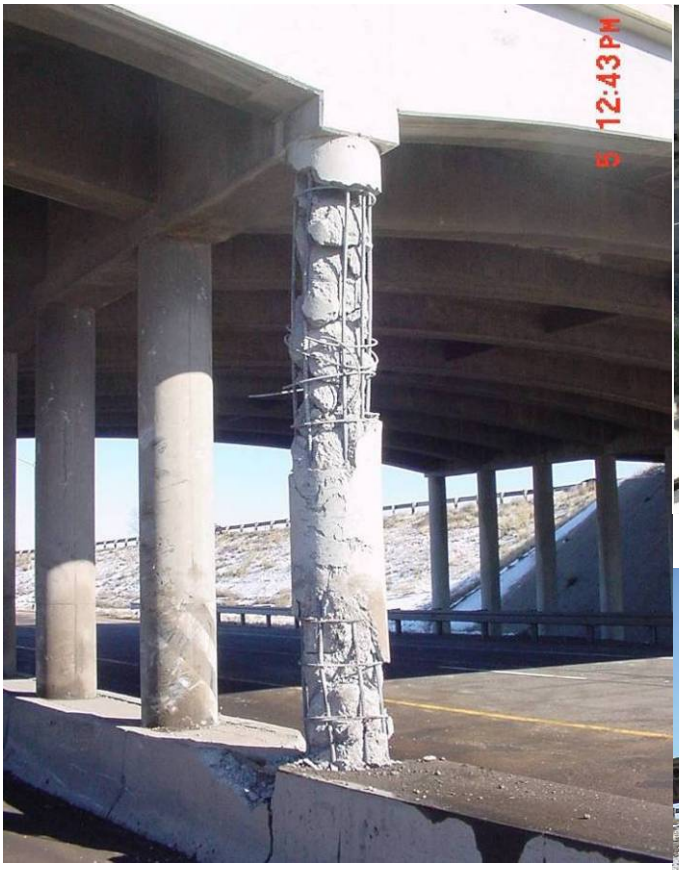

Photo 3.3-3

Photo 3.3-2

Photo 3.3-4

Photo 3.3-5