ELECTRIC DISTRIBUTION DESIGN AND CONSTRUCTION STANDARDS

OUTDOOR LIGHTING

OUTDOOR LIGHTING MANUAL
2016

TABLE OF CONTENTS

FOREWORD	FOREWORD
LM	LUMINAIRES
PL	POLES
AM	ARMS
FB	FOUNDATIONS
ODL REF	ODL REFERENCE
ODL CONST	ODL CONSTRUCTION

OUTDOOR LIGHTING CONSTRUCTION STANDARDS
SUMMARY OF 2016 MAJOR CHANGES

Each section begins with an index of the entire section, both design and drawings pages. Other major changes are listed below:

Forward	**Page**
• Updated Materials and Standards Council members and their titles.	Suggestion Form
• Added Natural to the Xcel Energy Color	INFO-1
• Added LED to the Luminaire C/U Coding (10L, 15L, 25L, 40L)	INFO-2
• Removed all C/U Group coding information but added for C/U Group information for pullboxes	INFO-3
Luminiare	
• New Section. Transferred information from pages ACORN-B, COBRA-B, COBRA-B.10, CONTP-B, CURV-B, CURV-B.10, HM-B, LANT-B, NIGHT-B, PEND-B, PEND-B.10, RECT-B, RECT-B.10, RECT-B.20, TRAD-B, TRAFFIC-B, VERNON-B, WC-B, and WOOD-B	LM-SECTION
Poles	
• New Section. Transferred information from pages ACORN-C, COBRA-C, COBRA-C .10, COBRA-C 12, COBRA-C.20, COBRA-C 30, COBRA-C.40, CONTP-C, CURV-C, CURV-C.10, CURV-C .20, HM-C, LANT-C, NIGHT-C, PEND-C, PEND-C.10, RECT-C, RECT-C.10, RECT-C.20, TRAD-C, VERNON-C, WC-C, and WOOD-C	PL-SECTION
Arms	
• New Section. Transferred information from pages ACORN-D, COBRA-D COBRA-D.05, COBRA-D.10, COBRA-D.15, COBRA-D.20, CURV-D, CURV-D.05, CURV-D.10, CURV-D.15, CURV-D.20, CURV-D.25, HM-D, NIGHT-D, PEND-D, RECT-D, RECT-D.05, RECT-D.10, RECT-D.20, RECT-D.25, RECT-D.30, VERNON-D, and WOOD-D	AM-SECTION
Foundations	
• New Section. Duplicated information from pages ODL REF-4.10, ODL REF-4.15, ODL REF-4.20, ODL REF-4.25	FB-SECTION
ODL Reference	
• Cobrahead separated into HID and LED rows, only come in grey	ODL REF-0.25
• Expert designer changed to Bentley Utility Designer	ODL REF-0.50
• New page added to section “Light Emitting Diode (LED) Light Sources”	ODL REF-1.05
• New page added to section “Light Emitting Diode (LED) Light Sources”	ODL REF-1.06
• New page, “Roadway Lighting layout and streetlight hand hole placement”	ODL REF-1.30
• New page, “Streetlight circuit layout”	ODL REF-1.40
• 600 V UG Cables added to page, Small change to Note 4 on page	ODL REF-2.30
• # of lights values switched between #6 & #4 for all Wattage levels	ODL REF-2.44
• #4 Al kit removed from list with Cat ID 53148, “C/U contains #4 Al kit” removed from under C/U	ODL REF-2.60
• C/U’s **ESCDCONDSL1, ESCDCONDSL4, EUCDCELOK-4** added to page	ODL REF-2.90
• All C/U’s on page have been updated	ODL REF-2.95
• Deleted ESFD2448121 from page	ODL REF-4.10
• 15x15 base added to list. “do not require” changed to “may not require”	ODL REF-4.20
• New page added, “breakaway bolts safety base”	ODL REF-4.30
• New page, “non-breakaway transformer base”	ODL REF-4.40

OUTDOOR LIGHTING CONSTRUCTION STANDARDS
SUMMARY OF 2016 MAJOR CHANGES

ODL Construction

• Pages added to index, grounding section added to index	ODL CONST-INDEX
• Page B.02 added list for side mount luminaires	ODL CONST-A.00
• Title Change	ODL CONST-B.00
• New page, “LED Luminaire component details”	ODL CONST-B.02
• New page, “Luminaire vandal shields”	ODL CONST-B.04
• New page, “Luminaire vandal shields”	ODL CONST-B.06
• Steps to confirm lamp failure placed into bullet points	ODL CONST-B.20
• New page “Metal halide and mercury vapor lamps”	ODL CONST-B.25
• “HPS” removed from title	ODL CONST-B.30
• Photocontrols converted from 2 to 1 words, drawing updated	ODL CONST-B.40
• Notes edited	ODL CONST-B.50
• New page, “Photocontrol receptacles 7-pin”	ODL CONST-B.70
• New page, “Photocontrol receptacles power tap adapter”	ODL CONST-B.80
• Notes added to page, drawings updated	ODL CONST-C.20
• New page, “concrete foundation risers”	ODL CONST-C.38
• Notes edited, drawings of safety base	ODL CONST-C.40
• New page, “breakaway support safety base”	ODL CONST-C.45
• New page, “Traffic signal Example drawing PSCo”	ODL CONST-C.80
• New page, “Streetlight and traffic circuit layout”	ODL CONST-G.25
• Links to K pages added for grounding guidance	ODL CONST-G.50
• Links to other pages removed from page	ODL CONST-G.70
• New page, “Wall and ceiling junction box mounting details”	ODL CONST-G.80
• Additional note added, drawing updated with more detail and links	ODL CONST-J.80
• Drawing updated with more detail and links	ODL CONST-J.90
• New page “wall and ceiling lum. Mounted installation”	ODL CONST-J.100
• New page “wall and ceiling lum. and relay box placement”	ODL CONST-J.110
• New page “streetlight pole gnding internal lug	ODL CONST-K.00
• New page “concrete streetlight foundation internal gnd connection	ODL CONST-K.10
• New page “Lum. and mast arm grounding”	ODL CONST-K.20
• New page “streetlight circuit grounding”	ODL CONST-K.30

INDEX-FOREWORD

TITLE	PAGE
Foreword	
Property of Xcel Energy	
Field Experience and Suggestion Form	
Compatible Units Revision/Suggestion Form	
General Information	INFO-1
C/U Coding Information	INFO-2
C/U Group Coding Information	INFO-3

2016 XCEL ENERGY
ELECTRIC DISTRIBUTION DESIGN AND CONSTRUCTION STANDARDS MANUAL - OUTDOOR LIGHTING

FOREWORD

The Electric Distribution Design and Construction Standards Manual - Outdoor Lighting represents the manner in which the Xcel Energy electric outdoor lighting system is to be constructed in order to provide reliable and economic lighting service to our customers. It supersedes all previously issued manuals, letters pertaining to manuals, and any other drawing that may have been issued and become generally used for construction purposes.

The purpose of this manual is to provide a related set of construction drawings and designs that apply to repetitive lighting system construction.

This manual shall govern construction and reconstruction work. When conditions or circumstances require modification of the design shown, such questions should be referred to Electric Distribution Standards for resolution.

This manual is intended to comply in all respects with the National Electrical Safety Code, state and local codes, and any rules and regulations of public authority, which apply. If any conflict occurs, the most stringent rule or regulation of public authority shall prevail.

This manual is the result of decisions made by Electric Distribution Standards to implement the outdoor lighting strategies, with important input and feedback from key stakeholders within Xcel Energy. A key part of this strategy is to achieve standardization whenever possible. Specific decision criterion considered includes safety, reliability, total owning cost, construction, operability, maintainability, manufacturer recommendations, tooling, training, and material handling. In some cases, decisions are based on using the most industry standard material that is readily available from numerous sources.

This manual includes design "Compatible Unit Groups," a list of components and/or assemblies, for each type of lighting. These “C/U Groups”, which are coupled to the Passport System, were compiled in order to consolidate choices, increase standardization, minimize design errors, and improve design, entry, construction, and closing productivity. Use of these "C/U Groups" will also assist in the classification of property for Capital Asset Accounting.

Suggestions for improvement of this manual are welcome and encouraged. A “Field Experience and Suggestion” form has been included in the front of each book. Completed suggestions should be forwarded to your user representative with a copy going to your immediate supervisor. Suggestions will be evaluated and documented in a timely manner by Electric Distribution Standards.

2016 XCEL ENERGY
ELECTRIC DISTRIBUTION DESIGN AND CONSTRUCTION STANDARDS MANUAL - OUTDOOR LIGHTING

I hereby certify, to the best of my knowledge, understanding, and belief, that updates to this Electric Distribution Design And Construction Standards Manual – Overhead dated 2010 were prepared by me or under my direct supervision and that I am a duly Registered Professional Engineer under the laws of the States of New Mexico, License # 11807, Colorado, Registration # 34378, and Texas, Certificate # 75958.

(Signature deleted for security reasons)
Ward M. Scharmer, P. E.
Manager – Electric Standards
Xcel Energy

I hereby certify, to the best of my knowledge, understanding, and belief, that updates to this Electric Distribution Design And Construction Standards Manual – Overhead dated 2010 were prepared by me or under my direct supervision and that I am a duly Registered Professional Engineer under the laws of the State of Colorado, Registration # 31365.

(Signature deleted for security reasons)
Rodney D. Sgrignoli, P. E.
Manager – Electric Standards
Xcel Energy

I hereby certify, to the best of my knowledge, understanding, and belief, that updates to this Electric Distribution Design And Construction Standards Manual – Overhead dated 2012 were prepared by me or under my direct supervision and that I am a duly Registered Professional Engineer under the laws of the State of Colorado, Registration # 31365.

(Signature deleted for security reasons)
Rodney D. Sgrignoli, P. E.
Manager – Electric Standards
Xcel Energy

I hereby certify, to the best of my knowledge, understanding, and belief, that updates to this Electric Distribution Design And Construction Standards Manual – Overhead dated 2014 were prepared by me or under my direct supervision and that I am a duly Registered Professional Engineer under the laws of the State of Colorado, Registration # 31365.

(Signature deleted for security reasons)
Rodney D. Sgrignoli, P. E.
Manager – Electric Standards
Xcel Energy

2016 XCEL ENERGY
ELECTRIC DISTRIBUTION DESIGN AND CONSTRUCTION STANDARDS MANUAL - OUTDOOR LIGHTING

I hereby certify, to the best of my knowledge, understanding, and belief, that updates to this Electric Distribution Design And Construction Standards Manual – Underground dated 2016 were prepared by me or under my direct supervision and that I am a duly Registered Professional Engineer under the laws of the State of Colorado, Registration # 33363.

(Signature deleted for security reasons)
Geoffrey Burg, P. E.
Principal Engineer – Electric Standards
Xcel Energy

ELECTRIC DESIGN AND CONSTRUCTION MANUAL

This manual is the property of XCEL ENERGY.

The XCEL Energy Electric Design and Construction Manual was developed by Xcel Energy for use by Xcel Energy employees based on its work practices, safety rules, training, appropriate governing authorities and rules, as well as weather, topography, material and historic construction methods.

Use of this manual by unauthorized third parties is not permitted and may result in damage or injury due to conditions unique to Xcel Energy for which the manual was developed.

This manual and the information it contains are the sole Property of Xcel Energy and are considered confidential. No part of this book will be distributed to any party without permission from Xcel Energy.

Use of the manual for engineering purposes is not authorized.

This manual shall be returned to Xcel Energy when it is not being used for the design or construction of Xcel Energy facilities.

FIELD EXPERIENCE AND SUGGESTION
DESIGN & CONSTRUCTION MANUAL

NAME: _____ **DATE:** _____

AREA: _____

TOPIC: _____ **PAGE:** _____

Please use the space below to describe your field experience comments and suggestions. Your comments and suggestions should be accompanied with reasons, sketches, photographs, or other exhibits in order that they may be given complete consideration. Proposed solutions should also be included.

SIGNATURE: _____ **DATE:** _____

Send this to your User Representative with a copy to your supervisor. Your supervisor should then forward the suggestion to Electric Distribution Standards, Lipan Distribution Center, Denver, CO.

ELECTRIC DISTRIBUTION MATERIALS & STANDARDS COUNCIL

COMPANY	NAME	TITLE	DEPARTMENT
Xcel	Geoff Burg	Principal Engineer	Electric Distribution Standards
Xcel	Rick Pelletier	Consultant	Category Management Sourcing
Xcel	Dave McCormack	Supervisor	Safety
Xcel	Mark Palacio	Manager	Technical Training
NSPM	Brad Sylliaasen	Manager	Design Construction & Maintnce.
NSPM	Joel Limoges	Manager	Electric Area Engineering
NSPW	Bob Molde	Principal Engineer	Electric Distribution Engineering
NSPW	Kevin Inman	Manager	Gas & Electric Field Operations
PSCo	Rodney Hunter	Director	Contracting & Utility Services
SPS	Chester Brown	Director	Construction & Design Eng

FIELD EXPERIENCE AND SUGGESTION
DESIGN & CONSTRUCTION MANUAL
PROCESS DIAGRAM

This flow chart indicates the steps to be taken when a comment or suggestion regarding the Design and Construction Manual is developed in the field.

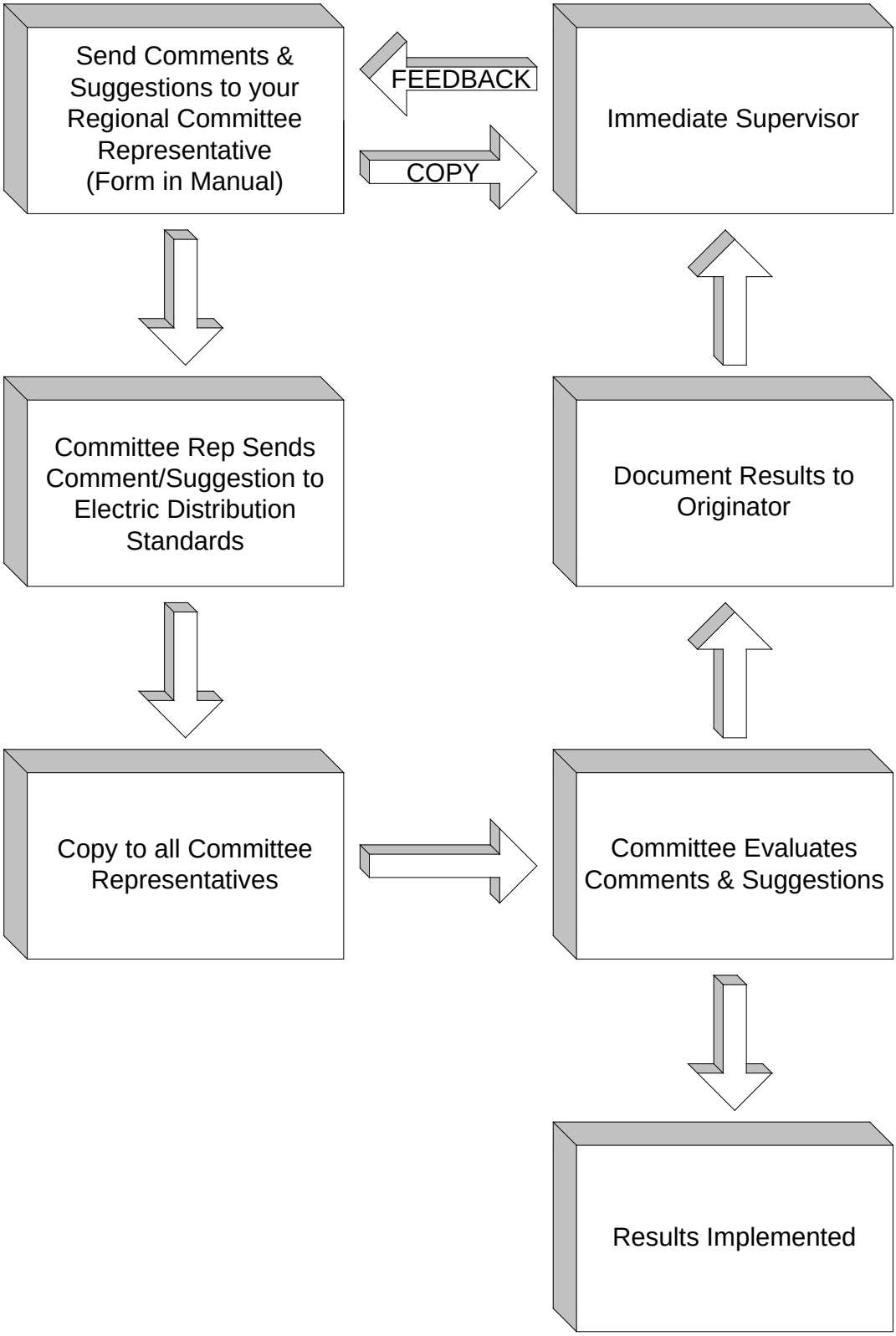

COMPATIBLE UNIT REVISION / SUGGESTION FORM

The path to the Electric Distribution Standards Compatible Unit Revision / Suggestion Form:

http://xpressnet/Job_Tools/Forms_and_Manuals/A_-_M_Forms/BS-Compatible_Unit_Revision_%7C_Suggestion_Form

You can also fill out the following document and forward it to your supervisor.

NAME_____ DATE_____

AREA_____

TOPIC_____ PAGE_____

Please use the space below to describe the change being requested with comments and suggestions. Your comments and suggestions should be accompanied with proposed solutions.

SIGNATURE_____ DATE_____

Please forward this request to your Supervisor. Your Supervisor should then forward the suggestion with his approval to Jeff Larson.

GENERAL INFORMATION

Pole or Standard

Poles that hold streetlights are often referred to as either **Poles** or **Standards**. The term **Standard** is referred to when a pole is foundation-mounted. The term **Pole** is used when the pole is direct buried. For consistency everything in this Design Manual will be referred to as a **Pole** whether it is direct buried or mounted on a foundation.

Roadway Lighting or Ornamental Lighting

The term roadway lighting is used for three styles or lights: Cobrahead, Curvilinear and Rectilinear. They are in general used for illumination of roads for better visibility for driving. Ornamental lights include all the more decorative styles used along street, parkways, and in business areas.

Luminaire Names

Often different manufacturers make similar styles of luminaires. They then attach their own brand name to the luminaire. Sometimes, even though names are different they can be the same luminaire or almost the same between different manufacturers. It may not always be the manufacturer that attaches different names, but the lighting industry calls different luminaires by their shape or a city where the luminaire was first installed. Always check on the name of luminaires mentioned to see exactly what is being referred to and compare it with the Xcel Energy Standard offerings. Some common names of luminaires are listed below:

Xcel Energy Name	Other Names
Cobrahead	
Curvilinear	Hockey Puck, Hatbox, Tuna Can
Rectilinear	
Shoebox	
Pendant	
Domus	Bern or Bell
Evans	Teardrop
Nightwatch	Boogerlight, Nemahead, Barnlight
Contemporary	China Hat
Traditional	
Colonial	
Basic or Classic	
Lantern	
With spikes	
No spikes	
Acorn	
Washington (clear top)	
Granville (opaque top)	
California (opaque top with decorative grill)	
Vernon	

Luminaire, Mast Arm and Pole Colors

The present streetlight system has a variety of colors. The bronze and brown colors are good examples with a number of similar colors. Xcel Energy is going to offer only standard shades of color. This color is tied to an RAL internationally recognized color system so when material arrives the pole, arm, luminaire, etc will match. The standard RAL color we buy may not always match existing installations. It is our intent to only buy the standard RAL color and as maintenance is done paint existing facilities to match. The standard colors are:

Xcel Energy Color	RAL Color Number	Similar Colors
Black	9017	
Federal Green	6012	
Dark Green	6005	
Dark Bronze (Brown)	8019	Mocha Brown, Lakewood Bronze, Bronze
Galvanized	N/A	
Light Grey	7047	Broomfield White/Grey
Dark Grey	7039	
Grey	7038 (Cobrahead luminaire only)	
Natural Aluminum	N/A	
Natural	N/A	

The RAL colors can be viewed on the Electric Distribution Standards webpage.

C/U CODING INFORMATION

C/U Coding

The C/Us try to follow a standard coding to keep them understandable and expandable as new streetlight types are added.

E - Electric
- S - Streetlight
  - L - Luminaire
  - P - Pole
  - A - Mast Arm
  - F - Foundation

For Luminaire, type is next:

C - Cobrahead
L - Curvilinear
R - Rectilinear
B - Shoebox Rectilinear
D - Domus
P - Contemporary
T - Traditional Colonial
TB - Traditional Basic
J - Lantern (With Spikes - Jefferson)
A - Lantern (No Spikes - Arlington)
W - Acorn (Washington Style - Clear Glass Top)
G - Acorn (Granville Style - Opaque Metal Top)
AC - Acorn (California Style - Opaque Metal Top with Decorative Grill)
V - Vernon
PE - Evans

For Poles and Mast Arms, material is next:

S - Steel
A - Aluminum
F - Fiberglass, etc.

For Luminaire, wattage and type is next:

07H - 70W HPS
10H - 100W HPS
15H - 150W HPS
25H - 250W HPS
40H - 400W HPS
10L - 100W* LED
15L - 150W* LED
25L - 250W* LED
40L - 400W* LED

**Equivalent HPS wattage*

For Poles and Mast Arms, length and style is next:

30T - 30 ft pole tenon top
14F - 14 ft - 6” fluted
35D - 35 ft pole davit arm
30S - 30 ft pole surface mount
4FT - 4 ft tenon single mast arm
4FM - 4 ft surface mount single mast arm
1FS - 1 ft single spoke arm
10D - 6 ft tenon double mast arm
1FD - 1 ft double spoke arm

The last 1 to 2 letters represent the color:

K - Black RAL9017
F - Federal Green RAL6012
G - Dark Green RAL6005
Z - Dark Bronze (Brown) RAL8019
V - Galvanized
Y - Grey (for cobrahead luminaire)
L - Light Grey RAL7047
D - Dark Grey RAL7039

Naming of Compatible Unit Groups

Utility	ODL	Major Material Group	Material/Labor Description
E	Electric Distribution		
	S	Streetlighting	
		Pullboxes	
		EP -	Electric Pullbox
		Conductor	
		1/0 -	(Maximum conductor size)
		4/0 -	(4/0 - 350 MCM)
		D -	Duplex
		T -	Triplex
		Rating	
		IT -	Incidental Traffic
		TR -	Traffic rated

ELECTRIC DISTRIBUTION DESIGN AND CONSTRUCTION STANDARDS

OUTDOOR LIGHTING

LUMINAIRES

LUMINAIRES
INDEX

TITLE Design Page	DESIGN PAGE	DRAWING PAGE
Information Page - Design Page Instructions	LM-INFO1	
Information Page - Design Page Instructions	LM-INFO2	
Side Mount Luminaires		
Side Mount Luminaire Cobrahead	LM-1.00	
Side Mount Luminaire Cobrahead	LM-1.10	
Side Mount Luminaire Cobrahead Maintenance only	LM-2.00	
Side Mount Luminaire Curvilinear	LM-3.00	
Side Mount Luminaire Curvilinear Maintenance only	LM-4.00	
Side Mount Luminaire Rectilinear	LM-5.00	
Side Mount Luminaire Rectilinear	LM-6.00	
Side Mount Luminaire Rectilinear Maintenance only	LM-7.00	
Post Top Luminaires		
Post Top Luminaire Acorn-Clear top	LM-8.00	
Post Top Luminaire Acorn-Opaque top	LM-9.00	
Post Top Luminaire Contemporary	LM-10.00	
Post Top Luminaire Lantern - With Spikes	LM-11.00	
Post Top Luminaire Lantern - No Spikes	LM-12.00	
Post Top Luminaire Traditional - Basic	LM-13.00	
Post Top Luminaire Traditional - Colonial	LM-14.00	
Post Top Luminaire Traditional - Vernon	LM-15.00	
Pendant Luminaires		
Pendant Luminaire - Domus	LM-16.00	
Pendant Luminaire - Evans	LM-17.00	
Nightwatch Luminaires		
Nightwatch Luminaire	LM-18.00	
Nightwatch Luminaire - Directional	LM-19.00	
Nightwatch Luminaire - Maintenance only	LM-20.00	
Nightwatch Luminaire - Directional Maintenance only	LM-21.00	
Wall and Ceiling Luminaires		
Wall and Ceiling - Wall Mounted Luminaire	LM-22.00	
Wall and Ceiling - Ceiling Mounted Luminaire	LM-23.00	
High Mast Luminaires		
High Mast Luminaires	LM-24.00	

DESIGN PAGE INSTRUCTIONS
LUMINAIRES

Standard Outdoor Lighting Material
The design pages contain all the standard Outdoor Lighting Material. In this section are the standard luminaires that Xcel Energy will use. Design standard material for new installations and for where the standard material is an appropriate match for legacy lighting. Items that have been installed in the past for some communities may no longer be Xcel Energy standard offerings. In some cases streetlight material has been used which will not match any of the current standard material. The old Cat IDs are still active and maintenance material can be ordered for these legacy installations.

Layout of Section
The Luminaires section contains design pages for the standard luminaires arranged by mounting style. There are five major mounting styles that the Luminaires are grouped by; Side Mount, Post Top, Pendant, Wall and Ceiling, and High Mast. Each group may contain several aesthetically different style luminaires. The design pages showing the pertinent C/Us, Cat IDs and illustrations of the various luminaire styles can be found on the below pages:

- Side Mount Luminaires — page - LM-1.00, LM-1.10, LM-2.00, LM-3.00, LM-4.00, LM-5.00, LM-6.00, LM-7.00
- Post Top Luminaires — page - LM-8.00, LM-9.00, LM-10.00, LM-11.00, LM-12.00, LM-13.00, LM-14.00, LM-15.00
- Pendant Style Luminaires — page - LM-16.00, LM-17.00
- Nightwatch Luminaires — page - LM-18.00, LM-19.00, LM-20.00, LM-21.00
- Wall and Ceiling — page - LM-22.00, LM-23.00
- High Mast Luminaires — page - LM-24.00

Side Mount luminaires are slip mounted on 2-3/8” Outside Diameter (OD) mast arms or davit poles. They include High Intensity Discharge (HID) and Light Emitting Diodes (LED) Cobrahead, Rectilinear, and Curvilinear style luminaires. Side Mount luminaires are available in different colors depending on their type and the jurisdiction.

Post Top luminaires mount on a 3” OD tenon top pole. They include Acorn, Contemporary, Traditional, Vernon and Lantern style luminaires. Post Top luminaires are available in various colors depending on their type and the jurisdiction.

Pendant style luminaires are available in two major styles, Domus and Evans style. Domus lights mount using a screw fitting to the shepherd hook adapter. The shepherd hook mounts to the 3” OD tenon top pole. Domus luminaire, shepherd hook, and pole color is black RAL9017 Evans lights are mounted using a horizontal mount adapter, also known as a plumbizer. The plumbizer slip fits to a 2-3/8” OD steel pipe arm. The Evans arm bolts to the Evans poles by means of two bolts. Evans luminaire, arm, and pole colors are black RAL9017, dark green RAL6005 and dark bronze (brown) RAL8019.

C/U Components
The C/Us contain the major item, such as the luminaire, and also contain the associated material that goes with it, such as the photocontrol and the correct wattage lamp for HID Luminaires.

DESIGN PAGE INSTRUCTIONS
LUMINAIRES

LED Luminaires

LED Luminaires are now available in those jurisdictions that have a pertinent rate in place. They are available only in Cobrahead style. The standard luminaires were qualified based performance equivalence to the HID fixtures. Due to the variability of the wattage ratings for equivalent LED luminaires, the company has selected to identify the lights based on delivered lumens. For design purposes and field identification of the luminaires, letters have been designated in ascending order. See table below for the letter designation, associated delivered lumens and equivalent HPS fixture wattage. All approved LED luminaires will be delivered with the pertinent field identification label affixed.

Letter Designation	Delivered Lumens	Equivalent HPS Wattage
A	3500 lm	70 W
B	4000 lm	100 W
C	6000 lm	150 W
D	14000 lm	250 W
E	25000 lm	400 W

Any questions on this new technology should be addressed to the Electric Distribution Standards department.

SIDE MOUNT LUMINAIRE
COBRAHEAD

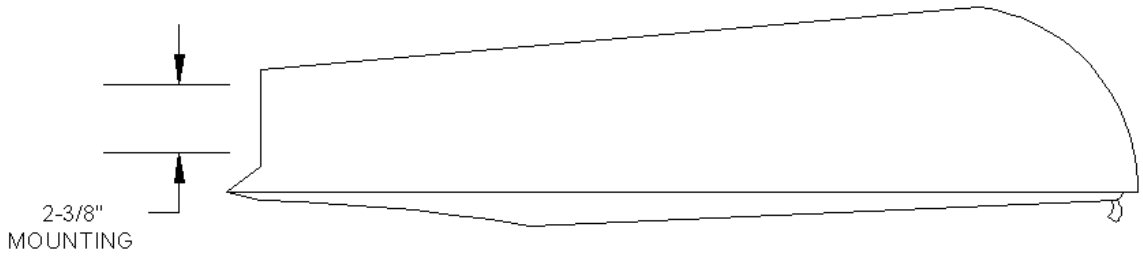

Description: For use on 2-3/8" OD arm	**C/U**	**Luminaire Cat ID**	**Color**
HPS			
Cobrahead - 100 W - cutoff lens[6]	**ESLC10HY**	54005	Grey[7]
Cobrahead - 150 W - cutoff lens[6]	**ESLC15HY**	54024	Grey[7]
Cobrahead - 250 W - cutoff lens[6]	**ESLC25HY**	54042	Grey[7]
Cobrahead - 400 W - cutoff lens[6]	**ESLC40HY**	54075	Grey[7]

Notes:
1. C/Us include the luminaire, photo control, and the correct lamp type for HPS luminaires where applicable.
2. Design only 100, 150, 250 and 400-Watt HPS Luminaires. Design only 120 V lighting systems.
3. Design type B, type C, type D and type E for LED Luminaires. Types B, C, D and E are functional equivalents to 100, 150, 250 and 400-Watt HPS luminaires respectively. The lumens (lm) shown are the delivered lumens. Please contact EDS or the latest specification for wattage rating.
4. Design poles, mast arms, foundations etc. using sections PL-INDEX, AM-INDEX and ODL REF-INDEX.
5. Cobrahead luminaires are slip fit mounted on 2-3/8" Outside Diameter (OD) pipe mast arms.
6. Check for proper illumination levels according to type of application.
7. All Cobrahead HPS luminaires are pre-wired for 120 V at the factory. Although all Cobrahead luminaires have multi tap ballasts with 120 V, 208 V, 240 V and 277 V; they must be re-wired to support voltages other than 120 V.
8. All standard LED Cobrahead luminaires have multi-voltage drivers rated for 120 - 277 V. LED lights can be designed for 120 V, 208 V, 240 V, and 277 V systems

SIDE MOUNT LUMINAIRE
COBRAHEAD

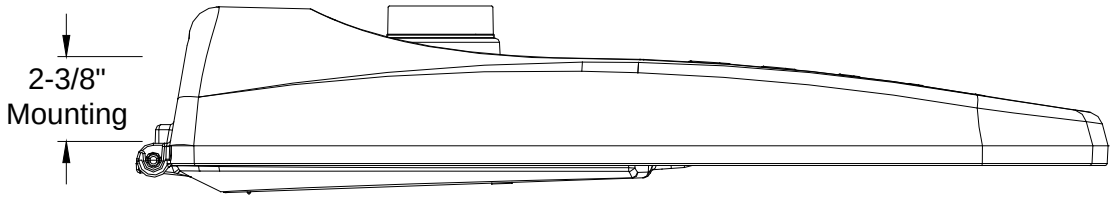

Description: For use on 2-3/8" OD arm	**C/U**	**Luminaire Cat ID**	**Color**
LED			
Cobrahead - 4000 lm LED - type B	**ESLC10LY**	219749	Grey[8]
Cobrahead - 6000 lm LED - type C	**ESLC15LY**	219751	Grey[8]
Cobrahead - 14000 lm LED - type D	**ESLC25LY**	219752	Grey[8]
Cobrahead - 25000 lm LED - type E	**ESLC40LY**	219753	Grey[8]
Cobrahead - 4000 lm LED - type B	**ESLC10LF**	221004	Federal Green[8]
Cobrahead - 6000 lm LED - type C	**ESLC15LF**	221005	Federal Green[8]
Cobrahead - 14000 lm LED - type D	**ESLC25LF**	221006	Federal Green[8]
Cobrahead - 25000 lm LED - type E	**ESLC40LF**	221007	Federal Green[8]

Notes:
1. C/Us include the luminaire, photo control, and the correct lamp type for HPS luminaires where applicable.
2. Design only 100, 150, 250 and 400-Watt HPS Luminaires. Design only 120 V lighting systems.
3. Design type B, type C, type D and type E for LED Luminaires. Types B, C, D and E are functional equivalents to 100, 150, 250 and 400-Watt HPS luminaires respectively. The lumens (lm) shown are the delivered lumens. Please contact EDS or the latest specification for wattage rating.
4. Design poles, mast arms, foundations etc. using sections PL-INDEX, AM-INDEX and ODL REF-INDEX.
5. Cobrahead luminaires are slip fit mounted on 2-3/8" Outside Diameter (OD) pipe mast arms.
6. Check for proper illumination levels according to type of application.
7. All Cobrahead HPS luminaires are pre-wired for 120 V at the factory. Although all Cobrahead luminaires have multi tap ballasts with 120 V, 208 V, 240 V and 277 V; they must be re-wired to support voltages other than 120 V.
8. All standard LED Cobrahead luminaires have multi-voltage drivers rated for 120- 277 V. LED lights can be designed for 120 V, 208 V, 240 V, and 277 V systems.

SIDE MOUNT LUMINAIRE
COBRAHEAD
MAINTENANCE ONLY

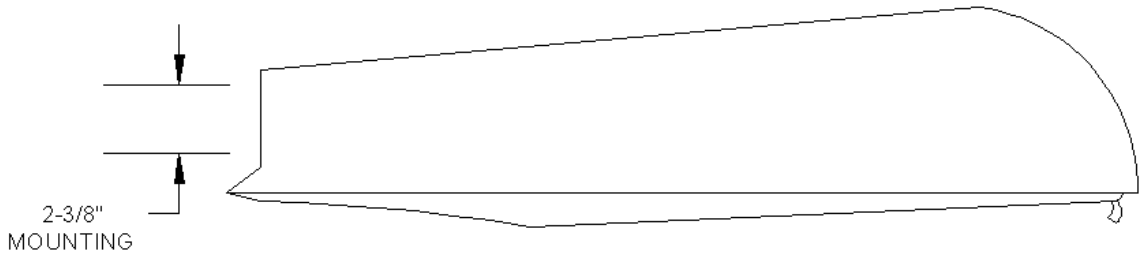

Description: For use on 2-3/8" OD arm	**C/U**	**Luminaire Cat ID**	**Color**
HPS			
Cobrahead - 70 W - cutoff lens[6]	**ESLC07HY**	53984	Grey[5]
Cobrahead - 200 W - cutoff lens[6]	**ESLC20HY**	54037	Grey[5]

Replacement Drop-Lens Refractor Only		
HPS		
70 W - 250 W, IES Type III (smaller sized Cobrahead)	54181	Clear
200 W - 400 W, IES Type III (larger sized Cobrahead)	54170	Clear

Notes:
1. C/Us include the luminaire, photo control, and the correct lamp type for HPS luminaires where applicable.
2. Luminaires are mechanically compatible with standard 2-3/8" Outside Diameter (OD) pipe mast arms.
3. Design poles, mast arms, foundations etc. using sections PL-INDEX, AM-INDEX and ODL REF-INDEX.
4. Check for proper illumination levels according to type of application.
5. All Cobrahead luminaires are pre-wired for 120 V at the factory. However all approved Cobrahead luminaires have multi-voltage ballasts that support the following voltages: 120 V, 208 V, 240 V, and 277 V. Cobrahead luminaires must be re-wired to support voltages if other than 120 V.
6. All HID Cobrahead luminaires are grey (RAL7038) in color.

SIDE MOUNT LUMINAIRE
CURVILINEAR

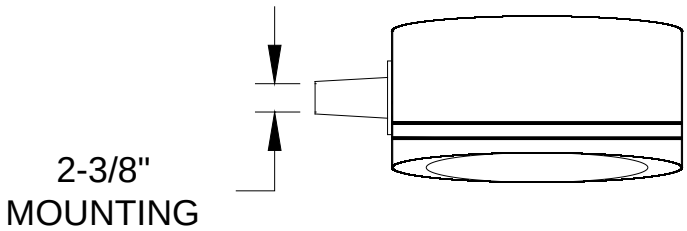

Description: For use on 2-3/8" OD arm	**C/U**	**Luminaire Cat ID**	**Color**
HPS			
Curvilinear - 100 W - Mast or Spoke Arm[6]	**ESLL10HK**	213456	Black
Curvilinear - 150 W - Mast or Spoke Arm[6]	**ESLL15HK**	101107	Black
Curvilinear - 250 W - Mast or Spoke Arm[6]	**ESLL25HK**	213457	Black
Curvilinear - 400 W - Mast or Spoke Arm[6]	**ESLL40HK**	213458	Black
Curvilinear - 100 W - Mast or Spoke Arm[6]	**ESLL10HF**	213460	Federal Green
Curvilinear - 150 W - Mast or Spoke Arm[6]	**ESLL15HF**	216358	Federal Green
Curvilinear - 250 W - Mast or Spoke Arm[6]	**ESLL25HF**	213461	Federal Green
Curvilinear - 400 W - Mast or Spoke Arm[6]	**ESLL40HF**	213462	Federal Green
Curvilinear - 250 W - Mast or Spoke Arm[6]	**ESLL25HL**	213459	Light Grey
Curvilinear - 400 W - Mast or Spoke Arm[6]	**ESLL40HL**	216487	Light Grey

Notes:
1. C/Us include the luminaire, photo control, and the correct lamp type for HPS luminaires where applicable.
2. Design only 100, 150, 250 and 400-Watt lamps. Design only 120 V lighting systems.
3. Design poles, mast arms, foundations etc. using sections PL-INDEX, AM-INDEX and ODL REF-INDEX.
4. Curvilinear luminaires are slip fit mounted on 2-3/8" Outside Diameter (OD) mast arm or spoke arm.
5. Check for proper illumination levels according to type of application.
6. All Curvilinear luminaires are pre-wired for 120 V at the factory. However all standard Curvilinear luminaires have multi-voltage ballasts that support the following voltages: 120 V, 208 V, 240 V, and 277 V. Curvilinear luminaires must be re-wired to support voltages if other than 120 V.

SIDE MOUNT LUMINAIRE
CURVILINEAR
MAINTENANCE ONLY

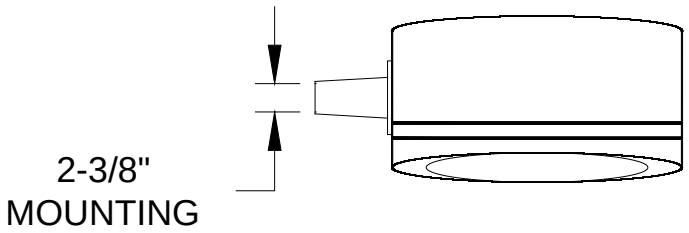

Description: For use on 2-3/8" OD arm	**C/U**	**Luminaire Cat ID**	**Color**
METAL HALIDE			
Curvilinear - 175 W MH - Mast or Spoke Arm[5]	**ESLL17MK**	101435	Black
Curvilinear - 250 W MH - Mast or Spoke Arm[5]	**ESLL25MK**	101297	Black
Curvilinear - 175 W MH - Mast or Spoke Arm[5]	**ESLL17MF**	211664	Federal Green
Curvilinear - 250 W MH - Mast or Spoke Arm[5]	**ESLL25MF**	99576	Federal Green
Curvilinear - 400 W MH - Mast or Spoke Arm[5]	**ESLL40MF**	67236	Federal Green
Curvilinear - 400 W MH - Mast or Spoke Arm[5]	**ESLL40ML**	218573	Light Grey
Curvilinear - 250 W MH - Mast or Spoke Arm[5]	**ESLL25MD**	54036	Dark Grey
Curvilinear - 400 W MH - Mast or Spoke Arm[5]	**ESLL40MD**	220033	Dark Grey
INDUCTION			
Curvilinear - 165 W Induction - Mast or Spoke Arm	**ESLL16IF**	211957	Federal Green

Notes:
1. C/Us include the luminaire, photo control, and the correct lamp type.
2. Mechanically compatible with standard 2-3/8" Outside Diameter (OD) mast arm or spoke arm.
3. Design poles, mast arms, foundations etc. using sections PL-INDEX, AM-INDEX and ODL REF-INDEX.
4. Check for proper illumination levels according to type of application.
5. All Curvilinear luminaires are pre-wired for 120 V at the factory. However all standard Curvilinear luminaires have multi-voltage ballasts that support the following voltages: 120 V, 208 V, 240 V, and 277 V. Curvilinear luminaires must be re-wired to support voltages if other than 120 V.

SIDE MOUNT LUMINAIRE
RECTILINEAR

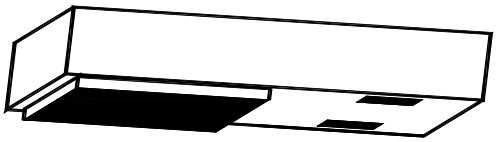

Description: For use on 2-3/8" OD arm	**C/U**	**Luminaire Cat ID**	**Color**
HPS			
Rectilinear - 100 W - Mast or Spoke arm[6]	**ESLR10HK**	54010	Black
Rectilinear - 150 W - Mast or Spoke arm[6]	**ESLR15HK**	216288	Black
Rectilinear - 250 W - Mast or Spoke arm[6]	**ESLR25HK**	54050	Black
Rectilinear - 400 W - Mast or Spoke arm[6]	**ESLR40HK**	54082	Black
Rectilinear - 100 W - Mast or Spoke arm[6] **(NSPM only)**	**ESLR10HG**	216284	Dark Green
Rectilinear - 150 W - Mast or Spoke arm[6] **(NSPM only)**	**ESLR15HG**	216286	Dark Green
Rectilinear - 250 W - Mast or Spoke arm[6] **(NSPM only)**	**ESLR25HG**	216285	Dark Green
Rectilinear - 100 W - Mast or Spoke arm[6]	**ESLR10HZ**	106556	Dark Bronze (Brown)
Rectilinear - 150 W - Mast or Spoke arm[6]	**ESLR15HZ**	106557	Dark Bronze (Brown)
Rectilinear - 250 W - Mast or Spoke arm[6]	**ESLR25HZ**	106558	Dark Bronze (Brown)
Rectilinear - 400 W - Mast or Spoke arm[6]	**ESLR40HZ**	54081	Dark Bronze (Brown)
Rectilinear - 250 W - Mast or Spoke arm[6]	**ESLR25HL**	220979	Light Grey

Notes:
1. C/Us include the luminaire, photo control, and the correct lamp type.
2. Design only 100, 150, 250 and 400-Watt lamps. Design only 120 V lighting systems.
3. Design poles, mast arms, foundations etc. using sections PL-INDEX, AM-INDEX and ODL REF-INDEX.
4. Rectilinear luminaires are slip fit mounted on 2-3/8" OD mast arm or spoke arm.
5. Check for proper illumination levels according to type of application.
6. All Rectilinear luminaires are pre-wired for 120 V at the factory. However all standard Rectilinear luminaires have multi-voltage ballasts that support the following voltages: 120 V, 208 V, 240 V, and 277 V. Rectilinear luminaires must be re-wired to support voltages if other than 120 V.

SIDE MOUNT LUMINAIRE
RECTILINEAR

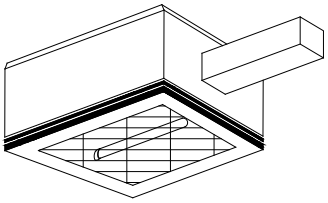

Description: Shoebox type for use on 2-3/8" OD arm	**C/U**	**Luminaire Cat ID**	**Color**
HPS - SHOEBOX			
Rectilinear - 100 W - Mast or Spoke arm	**ESLB10HK**	100338	Black
Rectilinear - 100 W - Mast or Spoke arm	**ESLB10HZ**	213470	Dark Bronze (Brown)
Rectilinear - 250 W - Mast or Spoke arm	**ESLB25HZ**	213471	Dark Bronze (Brown)
Rectilinear - 250 W - Mast or Spoke arm	**ESLB25HL**	213472	Light Grey
Rectilinear - 400 W - Mast or Spoke arm	**ESLB40HL**	213473	Light Grey
Description: Shoebox type for direct surface mount **(NSPM Only)**	**C/U**	**Luminaire Cat ID**	**Color**
Rectilinear - 100 W - Surface Mount	**ESLBS10HK**	212312	Black
Rectilinear - 150 W - Surface Mount	**ESLBS15HK**	219136	Black
Rectilinear - 250 W - Surface Mount	**ESLBS25HK**	212313	Black
Rectilinear - 100 W - Surface Mount	**ESLBS10HG**	209200	Dark Green
Rectilinear - 150 W - Surface Mount	**ESLBS15HG**	209201	Dark Green
Rectilinear - 250 W - Surface Mount	**ESLBS25HG**	209202	Dark Green
Rectilinear - 100 W - Surface Mount	**ESLBS10HZ**	209046	Dark Bronze (Brown)
Rectilinear - 150 W - Surface Mount	**ESLBS15HZ**	209047	Dark Bronze (Brown)
Rectilinear - 250 W - Surface Mount	**ESLBS25HZ**	106537	Dark Bronze (Brown)

Notes:
1. C/Us include the luminaire, photo control, and the correct lamp type where applicable.
2. Design only 100, 150, 250 and 400-Watt lamps. Design only 120 V lighting systems.
3. Design poles, mast arms, foundations etc. using sections PL-INDEX, AM-INDEX and ODL REF-INDEX.
4. Standard Rectilinear luminaires are slip fit mounted on 2-3/8" OD mast arm or spoke arm.
5. Check for proper illumination levels according to type of application.
6. All Rectilinear luminaires are pre-wired for 120 V at the factory. However all standard Rectilinear luminaires have multi-voltage ballasts that support the following voltages: 120 V, 208 V, 240 V, and 277 V. Rectilinear luminaires must be re-wired to support voltages if other than 120 V.

SIDE MOUNT LUMINAIRE
RECTILINEAR
MAINTENANCE ONLY

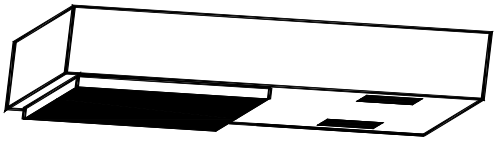

Description: For use on 2-3/8” OD arm	**C/U**	**Luminaire Cat ID**	**Color**
METAL HALIDE			
Rectilinear - 250 W MH - Mast or Spoke Arm[6]	ESLR25MZ	215894	Dark Bronze (Brown)
Rectilinear - 400 W MH - Mast or Spoke Arm[6]	ESLR40MZ	215895	Dark Bronze (Brown)

Notes:
1. C/Us include the luminaire, photo control, and the correct lamp type.
2. Mechanically compatible with standard arms.
3. Design poles, mast arms, foundations etc. using sections PL-INDEX, AM-INDEX and ODL REF-INDEX.
4. Rectilinear luminaires are slip fit mounted on 2-3/8” Outside Diameter (OD) mast arm or spoke arm.
5. Check for proper illumination levels according to type of application.
6. All Rectilinear luminaires are pre-wired for 120 V at the factory.

POST TOP LUMINAIRE
ACORN - CLEAR TOP

Washington - Clear Top			
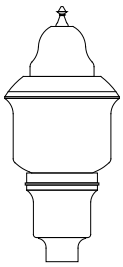			
Description: For use on 3" OD pole top tenon	**C/U**	**Luminaire Cat ID**	**Color**
HPS			
Washington Style - 70 W - post top[6]	**ESLW07HK**	209304	Black
Washington Style - 100 W - post top[6]	**ESLW10HK**	106631	Black
Washington Style - 150 W - post top[6]	**ESLW15HK**	106630	Black
Washington Style - 70 W - post top[6]	**ESLW07HF**	214351	Federal Green
Washington Style - 100 W - post top[6]	**ESLW10HF**	214353	Federal Green
Washington Style - 150 W - post top[6]	**ESLW15HF**	214354	Federal Green
Washington Style - 70 W - post top[6]	**ESLW07HG**	106627	Dark Green
Washington Style - 100 W - post top[6]	**ESLW10HG**	106628	Dark Green
Washington Style - 150 W - post top[6]	**ESLW15HG**	106629	Dark Green
Washington Style - 100 W - post top[6]	**ESLW10HZ**	106538	Dark Bronze (Brown)
Washington Style - 150 W - post top[6]	**ESLW15HZ**	209055	Dark Bronze (Brown)

Notes:
1. C/Us include the luminaire, photo control, and the correct lamp type.
2. Design only 70, 100 and 150-Watt lamps. Design only 120 V lighting systems.
3. Design Acorn poles, arms, etc. using sections PL-INDEX, AM-INDEX and ODL REF-INDEX.
4. Acorn luminaires are 3" OD post top mounted.
5. Check for proper illumination levels according to type of application.
6. All Standard Acorn luminaires are pre-wired for 120 V at the factory
7. Dark Green Luminaires are only offered in NSPM.

POST TOP LUMINAIRE
ACORN - OPAQUE TOP

Granville - Opaque Top			
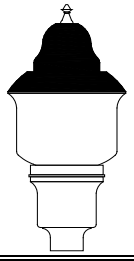			
Description: For use on 3” OD pole top tenon	**C/U**	**Luminaire Cat ID**	**Color**
HPS			
Granville Style - 70 W - post top[6]	**ESLG07HK**	214355	Black
Granville Style - 150 W - post top[6]	**ESLG15HK**	54003	Black
Granville Style - 70 W - post top[6]	**ESLG07HF**	214356	Federal Green

California - Opaque Top with Decorative Grill			
Description: For use on 3” OD pole top tenon	**C/U**	**Luminaire Cat ID**	**Color**
HPS			
California Style - 100 W - post top[6]	**ESLAC10HK**	209467	Black
California Style - 150 W - post top[6]	**ESLAC15HK**	209468	Black
California Style - 100 W - post top[6]	**ESLAC10HG**	212332	Dark Green
California Style - 150 W - post top[6]	**ESLAC15HG**	216427	Dark Green
California Style - 100 W - post top[6]	**ESLAC10HZ**	212333	Dark Bronze (Brown)
California Style - 150 W - post top[6]	**ESLAC15HZ**	212331	Dark Bronze (Brown)

Notes:
1. C/Us include the luminaire, photo control, and the correct lamp type.
2. Design only 70, 100 and 150-Watt lamps. Design only 120 V lighting systems.
3. Design Acorn poles, arms, etc. using sections PL-INDEX, AM-INDEX and ODL REF-INDEX.
4. Acorn luminaires are 3” OD post top mounted.
5. Check for proper illumination levels according to type of application.
6. All Standard Acorn luminaires are pre-wired for 120 V at the factory.

POST TOP LUMINAIRE
CONTEMPORARY

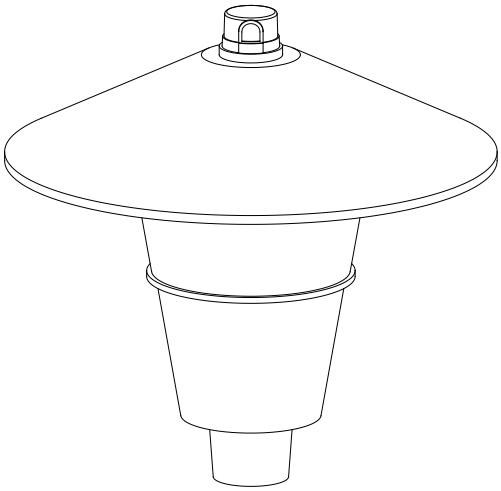

Description: For use on 3" OD pole top tenon	**C/U**	**Luminaire Cat ID**	**Color**
HPS			
Contemporary - 70 W - post top[6]	**ESLP07HK**	53985	Black
Contemporary - 100 W - post top[6]	**ESLP10HK**	54006	Black
Contemporary - 70 W - post top[6]	**ESLP07HL**	53986	Light Grey
Contemporary - 100 W - post top[6]	**ESLP10HL**	54007	Light Grey
Contemporary - 150 W - post top[6]	**ESLP15HL**	217677	Light Grey

Notes:
1. C/Us include the luminaire, photo control, and the correct lamp type.
2. Design only 70, 100 and 150-Watt lamps. Design only 120 V lighting systems.
3. Design Contemporary poles, using section PL-INDEX.
4. Contemporary luminaires are 3” OD tenon top mounted.
5. Check for proper illumination levels according to type of application.
6. All Contemporary luminaires are pre-wired for 120 V at the factory. However all standard Contemporary luminaires have multi-voltage ballasts that support the following voltages: 120 V, 208 V, 240 V, and 277 V. Contemporary luminaires must be re-wired to support voltages if other than 120 V.

POST TOP LUMINAIRE
LANTERN - WITH SPIKES

Lantern Luminaire - With Spikes			
Description: For use on 3” OD pole top tenon	**C/U**	**Luminaire Cat ID**	**Color**
HPS			
Lantern - 70 W - post top	**ESLJ07HK**	214332	Black
Lantern - 100 W - post top	**ESLJ10HK**	106560	Black
Lantern - 150 W - post top	**ESLJ15HK**	209058	Black
Lantern - 100 W - post top	**ESLJ10HZ**	180099	Dark Bronze
Lantern - 150 W - post top	**ESLJ15HZ**	209163	Dark Bronze
Lantern - 70 W - post top	**ESLJ07HF**	214333	Federal Green
Lantern - 100 W - post top	**ESLJ10HF**	214334	Federal Green
Lantern - 100 W - post top	**ESLJ10HG**	106643	Dark Green
Lantern - 150 W - post top	**ESLJ15HG**	209164	Dark Green

Notes:
1. C/Us include the luminaire, photo control, and the correct lamp type.
2. Design only 70, 100 and 150-Watt lamps. Design only 120 V lighting systems.
3. Design Lantern poles, arms, etc. using sections PL-INDEX, AM-INDEX and ODL REF-INDEX.
4. Lantern luminaires are 3” OD post top mounted.
5. Check for proper illumination levels according to type of application.
6. All Lantern luminaires are pre-wired for 120 V at the factory. However all standard Lantern luminaires have multi-voltage ballasts that support the following voltages: 120 V, 208 V, 240 V, and 277 V. Lantern luminaires must be re-wired to support voltages if other than 120 V.

POST TOP LUMINAIRE
LANTERN - NO SPIKES

Lantern Luminaire - No Spikes			
Description: For use on 3” OD pole top tenon	**C/U**	**Luminaire Cat ID**	**Color**
HPS			
Lantern - 70 W - post top [6]	**ESLA07HK**	214335	Black
Lantern - 100 W - post top [6]	**ESLA10HK**	106561	Black
Lantern - 150 W - post top [6]	**ESLA15HK**	209073	Black
Lantern - 70 W - post top [6]	**ESLA07HF**	214336	Federal Green
Lantern - 100 W - post top [6]	**ESLA10HF**	214339	Federal Green
Lantern - 150 W - post top [6]	**ESLA15HF**	220480	Federal Green
Lantern - 100 W - post top [6]	**ESLA10HG**	180102	Dark Green
Lantern - 150 W - post top [6]	**ESLA15HG**	209166	Dark Green
Lantern - 70 W - post top [6]	**ESLA07HZ**	214337	Dark Bronze (Brown)
Lantern - 100 W - post top [6]	**ESLA10HZ**	106644	Dark Bronze (Bronze)
Lantern - 150 W - post top [6]	**ESLA15HZ**	209165	Dark Bronze (Bronze)

Notes:
1. C/Us include the luminaire, photo control, and the correct lamp type.
2. Design only 70, 100 and 150-Watt lamps. Design only 120 V lighting systems.
3. Design Lantern poles, arms, etc. using sections PL-INDEX, AM-INDEX and ODL REF-INDEX.
4. Lantern luminaires are 3” OD post top mounted.
5. Check for proper illumination levels according to type of application.
6. All Lantern luminaires are pre-wired for 120 V at the factory. However all standard Lantern luminaires have multi-voltage ballasts that support the following voltages: 120 V, 208 V, 240 V, and 277 V. Lantern luminaires must be re-wired to support voltages if other than 120 V.

POST TOP LUMINAIRE
TRADITIONAL - BASIC

Traditional Basic			
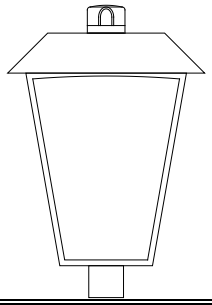			
Description: For use on 3" OD pole top tenon	**C/U**	**Luminaire Cat ID**	**Color**
HPS			
Traditional Basic - 70 W - post top[6]	**ESLTB07HK**	53987	Black
Traditional Basic - 100 W - post top[6]	**ESLTB10HK**	54008	Black
Traditional Basic - 150 W - post top[6]	**ESLTB15HK**	216477	Black
Traditional Basic - 70 W - post top[6]	**ESLTB07HZ**	106551	Dark Bronze
Traditional Basic - 100 W - post top[6]	**ESLTB10HZ**	106552	Dark Bronze
Traditional Basic - 150 W - post top[6]	**ESLTB15HZ**	106553	Dark Bronze

Notes:
1. C/Us include the luminaire, photo control, and the correct lamp type.
2. Design only 70, 100, and 150-Watt lamps. Design only 120 V lighting systems.
3. Design Traditional poles, arms, etc. using sections PL-INDEX, AM-INDEX and ODL REF-INDEX.
4. Traditional luminaires are 3" OD post top mounted.
5. Check for proper illumination levels according to type of application.
6. All Traditional luminaires are pre-wired for 120 V at the factory. However all standard Traditional luminaires have multi-voltage ballasts that support the following voltages: 120 V, 208 V, 240 V, and 277 V. Traditional luminaires must be re-wired to support voltages if other than 120 V.

POST TOP LUMINAIRE
TRADITIONAL - COLONIAL

Traditional Colonial			
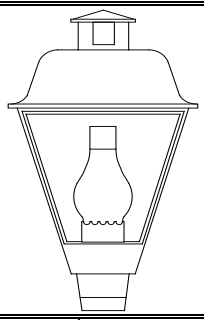			
Description: For use on 3” OD pole top tenon	**C/U**	**Luminaire Cat ID**	**Color**
HPS			
Traditional Colonial - 100 W - post top	**ESLT10HK**	54111	Black
Traditional Colonial - 150 W - post top	**ESLT15HK**	217209	Black
Traditional Colonial - 70 W - post top	**ESLT07HZ**	214340	Dark Bronze (Brown)
Traditional Colonial - 100 W - post top	**ESLT10HZ**	106540	Dark Bronze (Brown)
Traditional Colonial - 150 W - post top	**ESLT15HZ**	106541	Dark Bronze (Brown)

Notes:
1. C/Us include the luminaire, photo control, and the correct lamp type.
2. Design only 70, 100, and 150-Watt lamps. Design only 120 V lighting systems.
3. Design Traditional poles, arms, etc. using sections PL-INDEX, AM-INDEX and ODL REF-INDEX.
4. Traditional luminaires are 3” OD post top mounted.
5. Check for proper illumination levels according to type of application.
6. All Traditional luminaires are pre-wired for 120 V at the factory. However all standard Traditional luminaires have multi-voltage ballasts that support the following voltages: 120 V, 208 V, 240 V, and 277 V. Traditional luminaires must be re-wired to support voltages if other than 120 V.

POST TOP LUMINAIRE
VERNON

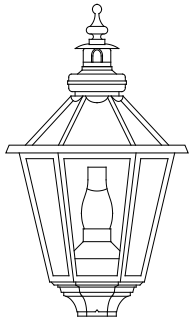

Description: For use on 3” OD pole top tenon	**C/U**	**Luminaire Cat ID**	**Color**
HPS			
Vernon - 100 W - post top	**ESLV10HK**	106571	Black
Vernon - 150 W - post top	**ESLV15HK**	106572	Black
Vernon - 100 W - post top	**ESLV10HZ**	209197	Dark Bronze
Vernon - 150 W - post top	**ESLV15HZ**	209199	Dark Bronze
Vernon - 150 W - post top	**ESLV15HDG**	209196	Dark Green

Notes:
1. C/Us include the luminaire, photo control, and the correct lamp type.
2. Design only 100 and 150-Watt lamps. Design only 120 V lighting systems.
3. Design Vernon poles, arms, etc. using sections PL-INDEX, AM-INDEX and ODL REF-INDEX.
4. Vernon luminaires are 3” OD tenon top mounted.
5. Check for proper illumination levels according to type of application.
6. All Vernon luminaires are pre-wired for 120 V at the factory. However all standard Vernon luminaires have multi-voltage ballasts that support the following voltages: 120 V, 208 V, 240 V and 277 V. Vernon luminaires must be re-wired to support voltages if other than 120 V.

PENDANT LUMINAIRE - DOMUS

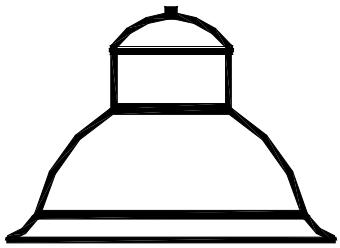

Description: For use with shepherd hook arm screw mounting	**C/U**	**Luminaire Cat ID**	**Color**
HPS			
Domus - 100 W HPS - cutoff lens	**ESLD10HK**	213476	Black
Domus - 250 W HPS - cutoff lens	**ESLD25HK**	213477	Black

Notes:
1. C/Us include the luminaire, photo control, and the correct lamp type.
2. Design only 100 and 250-Watt lamps. Design only 120 V lighting systems.
3. Design Domus poles, shepherd hook, using sections PL-INDEX, AM-INDEX and ODL REF-INDEX.
4. Domus luminaires are screw mounted into the shepherd hook and secured with a jam nut.
5. Check for proper illumination levels according to type of application.
6. All Domus luminaires are pre-wired for 120 V at the factory. However all standard Domus luminaires have multi-voltage ballasts that support the following voltages: 120 V, 208 V, 240 V, and 277 V. Domus luminaires must be re-wired to support voltages if other than 120 V.

PENDANT LUMINAIRE - EVANS

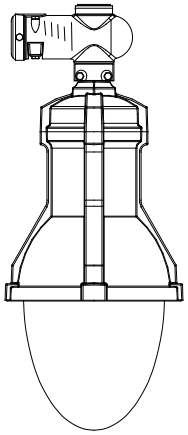

Description: For use on 2-3/8” OD arm	**C/U**	**Luminaire Cat ID**	**Color**
HPS			
Evans - 150 W HPS - post top	**ESLPE15HK**	216711	Black
Evans - 250 W HPS - post top	**ESLPE25HK**	216708	Black
Evans - 150 W HPS - post top	**ESLPE15HF**	220851	Federal Green
Evans - 250 W HPS - post top	**ESLPE25HF**	220852	Federal Green
Evans - 150 W HPS - post top	**ESLPE15HG**	216713	Dark Green
Evans - 250 W HPS - post top	**ESLPE25HG**	216710	Dark Green
Evans - 150 W HPS - post top	**ESLPE15HZ**	216712	Dark Bronze (Brown)
Evans - 250 W HPS - post top	**ESLPE25HZ**	216709	Dark Bronze (Brown)

Notes:
1. C/Us include the luminaire, photo control, and the correct lamp type.
2. Design only 150 and 250-Watt lamps. Design only 120 V lighting systems.
1. Design Evans poles, , arms, etc. using sections PL-INDEX, AM-INDEX and ODL REF-INDEX.
3. Evans luminaires are mounted using a horizontal adapter (plumbizer) to a 2-3/8” steel pipe arm.
4. Check for proper illumination levels according to type of application.
5. All Evans luminaires are pre-wired for 120 V at the factory. However all standard Evans luminaires have multi-voltage ballasts that support the following voltages: 120 V, 208 V, 240 V and 277 V. Evans luminaires must be re-wired to support voltages if other than 120 V.

NIGHTWATCH LUMINAIRE

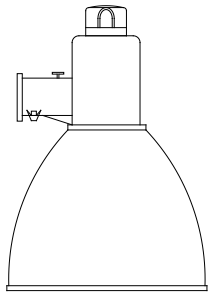

Description: For use on 1-1/4” OD arm	**C/U**	**Luminaire Cat ID**	**Color**
HPS			
Nightwatch - 70 W - cutoff lens	**ESLU70FCONW**	210776	Aluminum
Nightwatch - 100 W - cutoff lens	**ESLU10FCONW**	210777	Aluminum
Nightwatch - 150 W - cutoff lens	**ESLU15FCONW**	210778	Aluminum
Nightwatch - 250 W - cutoff lens	**ESLU25FCONW**	106605	Aluminum

Notes:
1. C/Us include the luminaire, photo control, and the correct lamp type.
2. Design only 70, 100, 150 and 250-Watt lamps. Design only 120 V lighting systems.
3. Design wood pole if needed, see page PL-13.50. Also see Overhead Manual Section A-POLES.
4. Nightwatch luminaires are slip fit mounted on 1-1/4” Outside Diameter (OD) pipe mast arms. The Luminaire is currently purchased with an arm.
5. Check for proper illumination levels according to type of application.
6. All Nightwatch luminaires are pre-wired for 120 V at the factory.

NIGHTWATCH LUMINAIRE - DIRECTIONAL

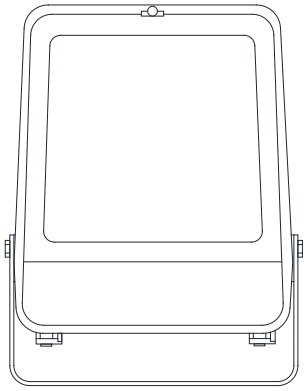

Description: For use on 2-3/8" OD tenon	**C/U**	**Luminaire Cat ID**	**Color**
HPS			
Directional Nightwatch - 150 W **(SPS only)**	**-**	76968	-
Directional Nightwatch - 250 W	**ESLU25FCONW**	106609	-
Directional Nightwatch - 400 W	**ESLU40FCONW**	106610	-

Notes:
1. C/Us include the luminaire, photo control, and the correct lamp type.
2. Design only 250 and 400-Watt lamps. Design only 120 V lighting systems.
3. Design wood pole using page PL-13.50.
4. Directional Nightwatch luminaires are slip fit mounted on 1-7/8" through 2-3/8" Outside Diameter (OD) vertical pipe tenon.
5. Check for proper illumination levels according to type of application.
6. All Directional Nightwatch (floodlight) luminaires are pre-wired for 120 V at the factory.
7. Directional Nightwatch Luminaires (also called floodlights) are primarily used as Area lights in NSPW and SPS. SPS is only maintaining existing floodlights.

NIGHTWATCH LUMINAIRE
MAINTENANCE ONLY

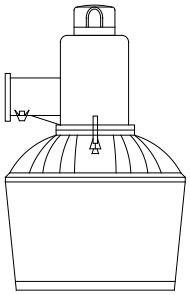

Description: For use on 1-1/4” OD arm	**C/U**	**Luminaire Cat ID**	**Color**
HPS			
Nightwatch - 100 W	**ESLUNSA1P**	106596	-
Nightwatch - 100 W	**ESLUNW150**	180082	-
Nightwatch - 250 W	**ESLUNSB1P**	106605	-

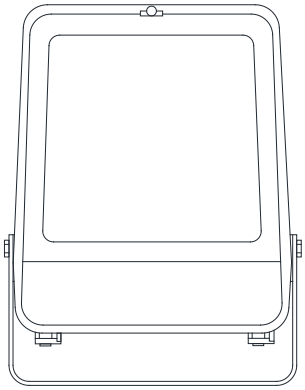

Description: For use on 2-3/8” OD tenon	**C/U**	**Luminaire Cat ID**	**Color**
HPS			
Directional Nightwatch - 1000 W **(SPS only)**	**ESLU100FCONW**	76973	-

Notes:
1. C/Us include the luminaire, photo control, and the correct lamp type.
2. Nightwatch luminaires are slip fit mounted on 1-1/4” Outside Diameter (OD) pipe mast arms. The Nightwatch Luminaire is currently purchased with an arm.
3. (SPS only) Directional Nightwatch luminaires are slip fit mounted on 1-7/8” through 2-3/8” Outside Diameter (OD) vertical pipe tenon.
4. Check for proper illumination levels according to type of application.
5. All Nightwatch luminaires are pre-wired for 120 V at the factory.

NIGHTWATCH LUMINAIRE - DIRECTIONAL
MAINTENANCE ONLY

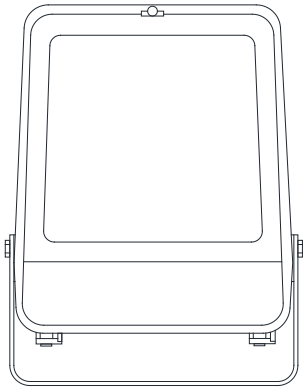

Description: For use on 2-3/8” OD tenon	**C/U**	**Luminaire Cat ID**	**Color**
High Pressure Sodium (HPS)			
Directional Nightwatch - 150 W	**-**	76968	-
Metal Halide (MH)			
Directional Nightwatch - 400 W	**-**	76970	
Directional Nightwatch - 1000 W	**-**	76972	-

Notes:
1. Directional Nightwatch luminaires are slip fit mounted on 1-7/8” through 2-3/8” Outside Diameter (OD) vertical pipe tenon.
2. Check for proper illumination levels according to type of application.
3. All Directional Nightwatch (floodlight) luminaires are pre-wired for 120 V at the factory.
4. Directional Nightwatch Luminaires (also called floodlights) are primarily used as Area lights in NSPW and SPS. SPS is only maintaining existing floodlights.

WALL AND CEILING
WALL MOUNTED LUMINAIRE

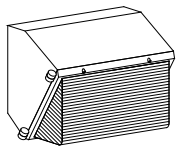

Luminaire

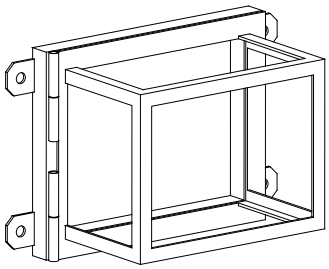

Vandal Cage

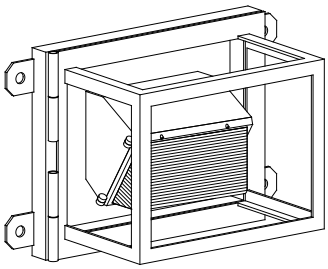

Luminaire in Vandal Cage

Description: Design for wall mounting	**C/U**	**Cat ID**	**Color**
Wallpack Luminaire - 150 W HPS (C/U does not include vandal cage)	**ESLUM150WP**	100319	Dark Bronze (Brown)
Vandal Cage - Lexan Windows with Al Frame (C/U does not include wallpack luminaire)	**ESLVRCWP15X20**	214262	Clear Lexan
Vandal Cage - Large Lexan Windows with Al Frame (C/U does not include wallpack luminaire)	**ESLVRCWP24X24**	214261	Clear Lexan

Notes:
1. Luminaire C/U includes the lamp with the luminaire.
2. Luminaire C/U does not include the photo control; design separately. See the ODL REF-Section.
3. Design only 150-Watt lamps. Design only 120 V lighting systems.
4. Wall Pack luminaire are designed for wall mounting.
5. Check for proper illumination levels according to type of application.
6. All wallpack luminaires are pre-wired for 120 V at the factory. However all standard wallpack luminaires have multi-voltage ballasts that support the following voltages: 120 V, 208 V, 240 V, and 277 V. Wallpack must be re-wired to support voltages if other than 120 V.

WALL AND CEILING
CEILING MOUNTED LUMINAIRE

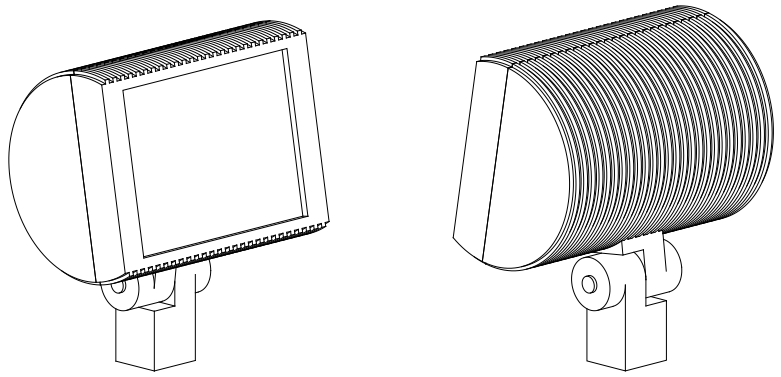

Description: Design for ceiling mounting	**C/U**	**Luminaire Cat ID**	**Color**
Ceiling Mounted 150 W Luminaire Package	**ESLUM150CM**	53993	Light Grey
Ceiling Mounted 250 W Luminaire Package	**ESLUM250CM**	53997	Light Grey

Notes:
1. C/U includes the lamp with the luminaire.
2. C/U does not include the photo control; design separately. See the ODL REF-Section.
3. Design only 120 V lighting systems.
4. Check for proper illumination levels according to type of application.
5. All ceiling mounted luminaires are pre-wired for 120 V at the factory. However all standard ceiling mounted luminaires have multi-voltage ballasts that support the following voltages: 120 V, 208 V, 240 V, and 277 V. Ceiling mounted luminaires must be re-wired to support voltages if other than 120 V.

HIGH MAST LUMINAIRE

High Mast Luminaire		
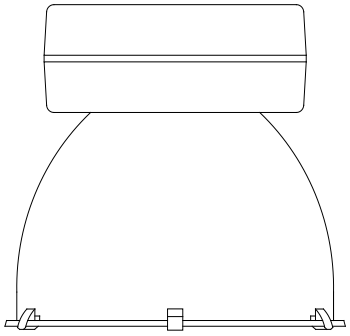		
Description: For use on 2-3/8" OD arm	**C/U**	**Cat ID**
Luminaire, High Mast type only, 1000 W HPS 240 V, flat glass, with symmetrical optics	-	54068
Mid Mast Luminaire		
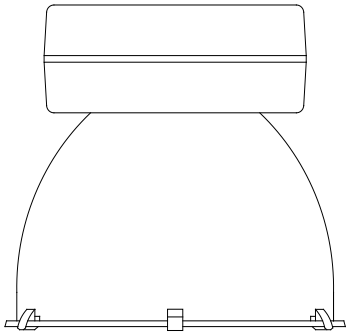		
Description: For use on 2-3/8" OD spoke arm		
Luminaire, Mid Mast type only, 1000 W HPS 240 V, flat glass, with symmetrical optics (maximum of three luminaires per Mid Mast Pole)	-	216876
Controller Cabinet		
High Mast Controller Cabinet, 240 V, includes 120 V outlet for lowering motor power, 100 A photo control receptacle included stainless steel NEMA 3R enclosure (minimum)	-	54788
High Mast Controller Cabinet, 240 V, includes 120 V outlet for lowering motor power, 200 A photo control receptacle included stainless steel NEMA 3R enclosure (minimum)	-	212001

Notes:
1. Both the high mast and mid mast luminaire are mounted by means of a slip-fitter.
2. Maximum of (4) 400 W Light Grey RAL7047 curvilinear luminaires can be designed for the 65 ft mid mast poles. These luminaires can be found on page LM-3.00
3. For conductor, see page ODL REF-2.30. For conduit, see page ODL REF-2.90.

ELECTRIC DISTRIBUTION DESIGN AND CONSTRUCTION STANDARDS

OUTDOOR LIGHTING

POLES

POLES
INDEX

TITLE	DRAWING PAGE	DESIGN PAGE
Information Page - Design Page Instructions	PL-INFO1	
Steel Poles		
Davit Arm - Side Mount Luminaires	PL-1.00	PL-1.10
Tenon Top - Side Mount Luminaires	PL-2.00	
Tenon Top - Spoke Arm - Side Mount Luminaires	PL-2.10	
Tenon Top - Side Mount Luminaires		PL-2.50
OH Fed Steel Pole - Tenon Top - Side Mount Luminaires	PL-3.00	PL-3.10
Tenon Top - Post Top and Pendant Luminaires	PL-4.00	PL-4.10
Fluted Steel Pole - Two Bolt - Evans Luminaires	PL-5.00	PL-5.10
Aluminum Poles		
Surface Mount - Side Mount Luminaires	PL-6.00	PL-6.10
Tenon Top - Post Top Luminaires Direct Buried	PL-7.00	
Tenon Top - Post Top Luminaires Direct Buried	PL-7.25	
Tenon Top - Post Top Luminaires FM	PL-7.50	
Tenon Top - Post Top Luminaires		PL-7.70
Fluted Aluminum Pole - Tenon Top - Post Top & Pendant	PL-8.00	PL-8.10
Fiberglass Poles		
Surface Mount - Side Mount Luminaires	PL-9.00	PL-9.10
Tenon Top - Side Mount Luminaires	PL-10.00	
Tenon Top - Spoke Arm - Side Mount Luminaires	PL-10.10	
Tenon Top - Side Mount Luminaires		PL-10.50
Tenon Top - Post Top Luminaires	PL-11.00	PL-11.10
Fluted Tenon Top - Post Top Luminaires	PL-12.00	PL-12.10
Wood Poles		
Underground Fed - Cobrahead Luminaire	PL-13.00	
Overhead Fed - Cobrahead Luminaire	PL-13.10	
Underground Fed - Nightwatch Luminaire	PL-13.20	
Overhead Fed - Nightwatch Luminaire	PL-13.30	
Cobrahead & Nightwatch Luminaire		PL-13.50
High Mast Poles		
Steel High Mast Pole	PL-14.10	
Steel Mid Mast Pole	PL-14.20	
Traffic Signal Poles		
Steel Traffic Signal Pole	PL-15.00	
Steel Traffic Signal Pole		PL-15.10

DESIGN PAGE INSTRUCTIONS
POLES

Standard Outdoor Lighting Material
The design pages contain all the standard Outdoor Lighting Material. In this section are the standard poles that Xcel Energy will use. Design standard material for new installations and for where the standard material is an appropriate match for legacy lighting. Items that have been installed in the past for some communities may no longer be Xcel Energy standard offerings. In some cases streetlight material has been used which will not match any of the current standard material. Legacy Cat IDs are still active and maintenance material can be ordered for these legacy installations.

Layout of Section
The Poles section contains design pages for the standard poles primarily arranged by material and arm or luminaire mounting style. There are four major types of poles; steel, aluminum, fiberglass and wood poles. Each group may contain several aesthetically different style poles. The design and drawing pages showing the pertinent C/Us, Cat IDs and illustrations of the various pole styles can be found on the PL-INDEX page.

Standard poles are primarily 3” OD Tenon Top poles. Tenon Top poles will accept slip fit arms or the standard Post Top luminaires. NSPM has a handful of aluminum and fiberglass surface mount poles that allow for aluminum arms to be directly bolted onto the pole. Steel, Aluminum and Fiber poles are available in various colors depending on their type and the jurisdiction.

All standard poles have been specifically designed to accommodate specific standard luminaires and arms. Any unapproved loads or attachments will compromise the structural integrity of the poles and are therefore expressly forbidden.

C/U Components
The C/Us contain the pole Cat ID, and also contain the associated material that goes with it, such as the cable and the identification tag or grid plate.

STEEL POLE - DAVIT ARM
SIDE MOUNT LUMINAIRES

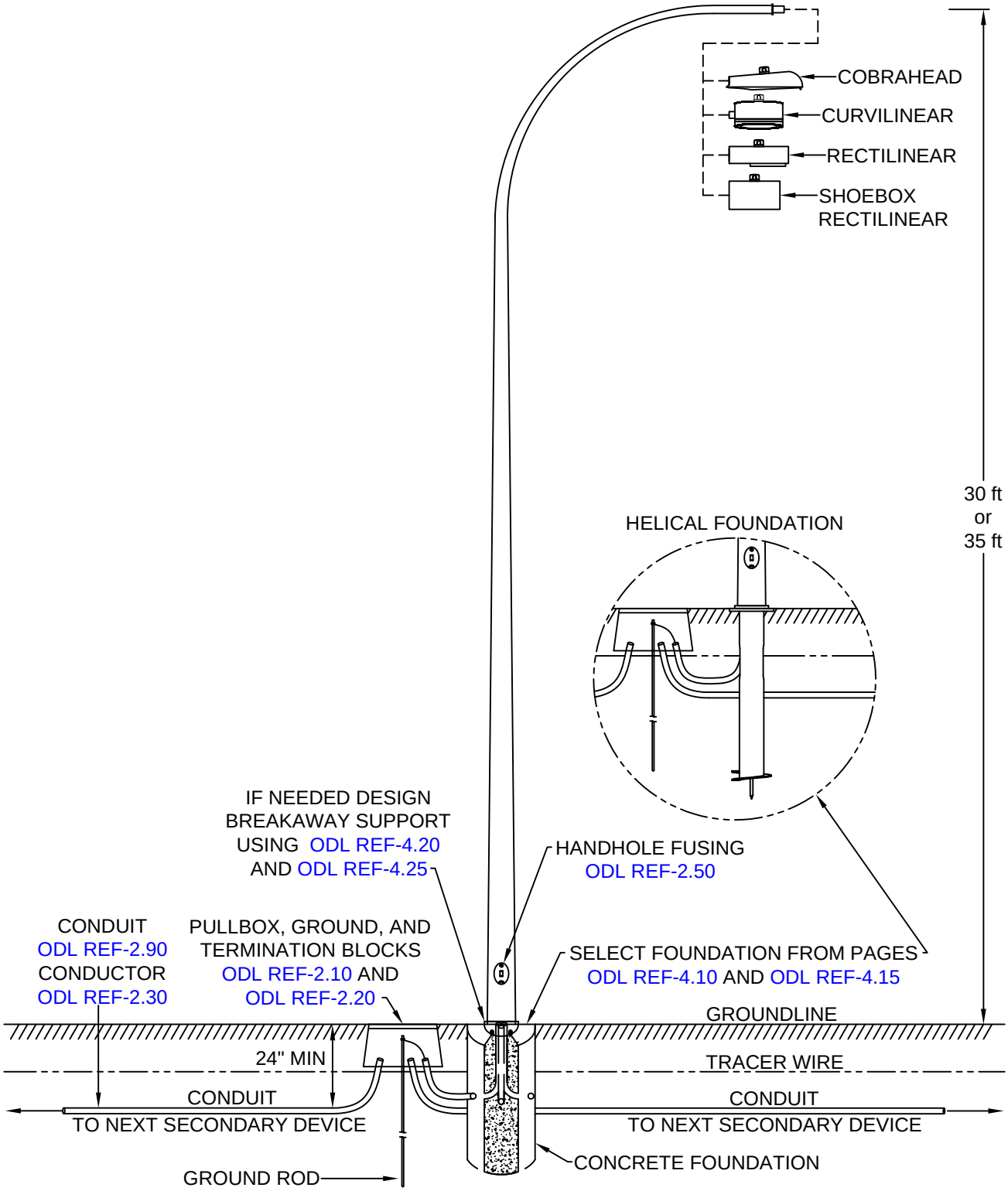

Xcel Energy	Issued	Replaces	Drawn by	Approved	File	OUTDOOR LIGHTING MANUAL
	Jan-16	New	JD	GWB	PL-_1.00	PAGE PL-1.00

STEEL POLE - DAVIT ARM
SIDE MOUNT LUMINAIRES

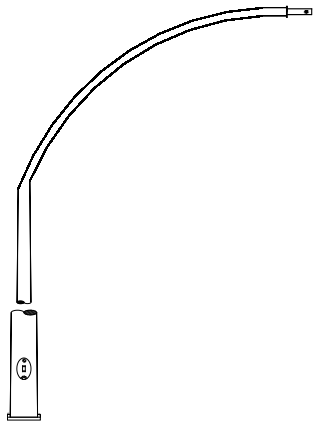

Galvanized Painted Steel or Galvanized - Foundation Mounted			
Description: Round Tapered	**C/U**	**Pole Cat ID**	**Color**
30 ft Poles - Foundation Mounted			
Davit Arm Pole - Steel 30 ft	**ESPS30DK**	54414	Black
Davit Arm Pole - Steel 30 ft	**ESPS30DF**	54412	Federal Green
Davit Arm Pole - Steel 30 ft	**ESPS30DZ**	54415	Dark Bronze (Brown)
Davit Arm Pole - Steel 30 ft	**ESPS30DV**	67541	Galvanized
35 ft Poles - Foundation Mounted			
Davit Arm Pole - Steel 35 ft	**ESPS35DK**	54449	Black
Davit Arm Pole - Steel 35 ft	**ESPS35DF**	54423	Federal Green
Davit Arm Pole - Steel 35 ft	**ESPS35DZ**	54432	Dark Bronze (Brown)
Davit Arm Pole - Steel 35 ft	**ESPS35DV**	54424	Galvanized

Notes:
1. Davit arm poles do not need a mast arm as the pole is the mast arm. 2-3/8” OD end of pole fits all standard Side Mount luminaires.
2. Design the foundation, pullbox, conductor, conduit, grounding, streetlight fusing and streetlight circuit fusing; see ODL REF-INDEX.
3. Design Breakaway Supports (if needed); see pages ODL REF-4.20 and ODL REF-4.25.

STEEL POLE - TENON TOP
SIDE MOUNT LUMINAIRES

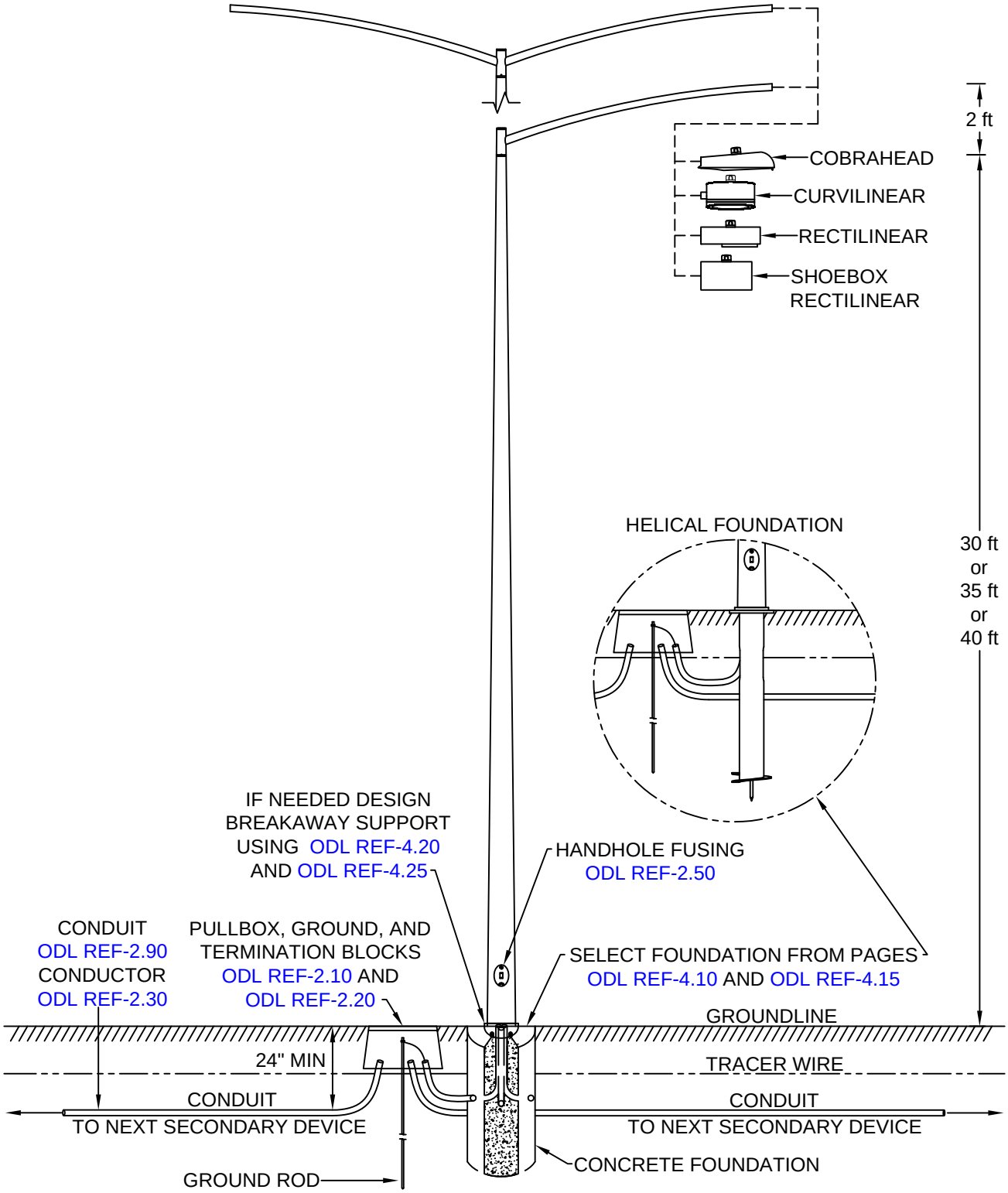

Xcel Energy	Issued	Replaces	Drawn by	Approved	File	OUTDOOR LIGHTING MANUAL
	Jan-16	New	JD	GWB	PL-_2.00	PAGE PL-2.00

STEEL POLE - TENON TOP - SPOKE ARM SIDE MOUNT LUMINAIRES

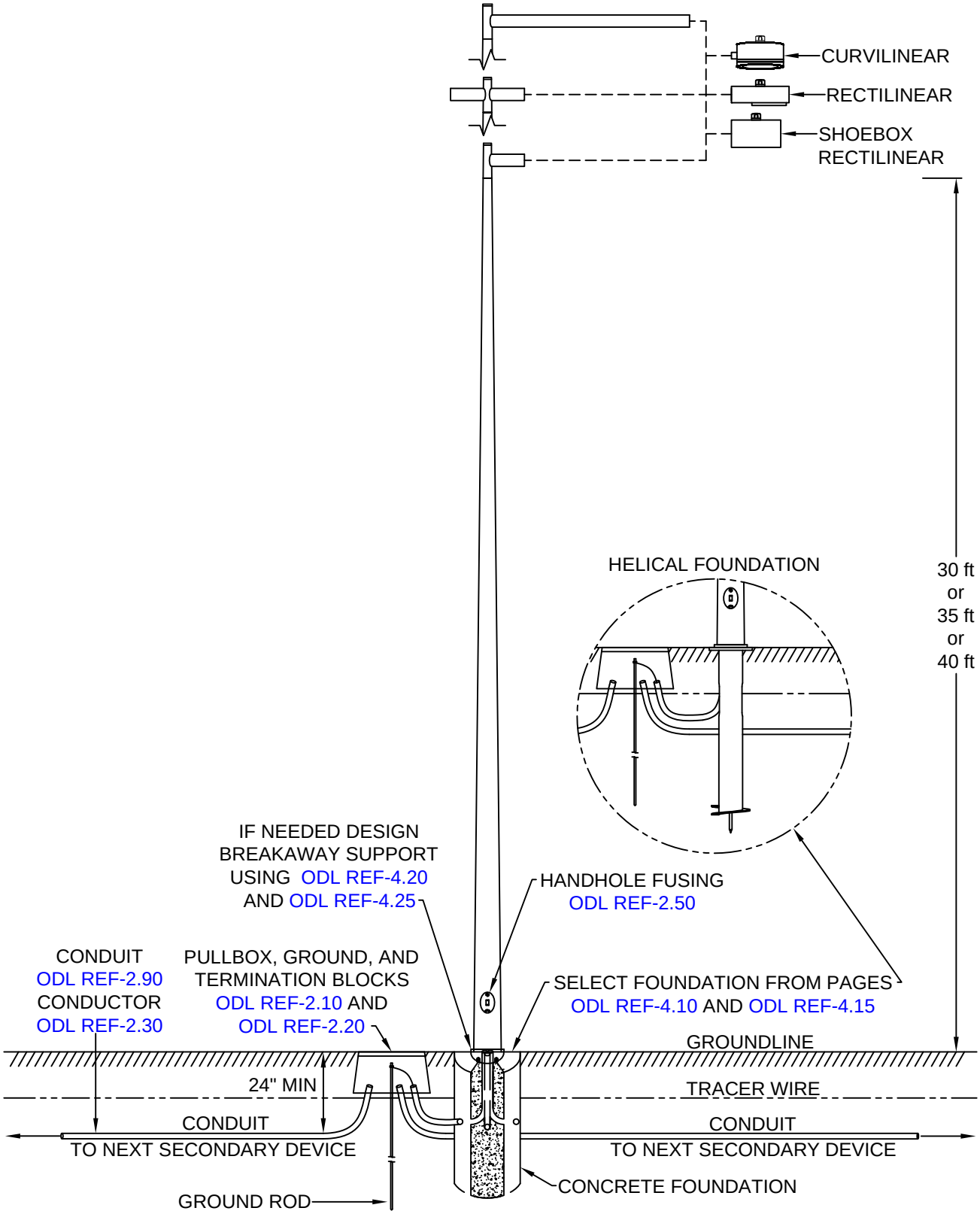

Xcel Energy	Issued	Replaces	Drawn by	Approved	File	OUTDOOR LIGHTING MANUAL
	Jan-16	New	JD	GWB	PL-_2.10	PAGE PL-2.10

STEEL POLE - TENON TOP
SIDE MOUNT LUMINAIRES

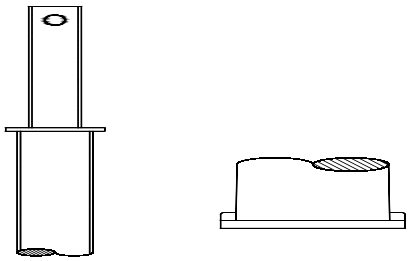

Galvanized Painted Steel or Galvanized - Foundation Mounted			
Description: Round Tapered	**C/U**	**Pole Cat ID**	**Color**
30 ft Poles			
Tenon Top Pole - Steel 30 ft	**ESPS30TK**	213432	Black
Tenon Top Pole - Steel 30 ft	**ESPS30TF**	213429	Federal Green
Tenon Top Pole - Steel 30 ft	**ESPS30TZ**	213438	Dark Bronze (Brown)
Tenon Top Pole - Steel 30 ft	**ESPS30TV**	213421	Galvanized
Tenon Top Pole - Steel 30 ft	**ESPS30TL**	213435	Light Grey
Tenon Top Pole - Steel 30 ft	**ESPS30TD**	213434	Dark Grey
35 ft Poles			
Tenon Top Pole - Steel 35 ft	**ESPS35TK**	213431	Black
Tenon Top Pole - Steel 35 ft	**ESPS35TF**	213430	Federal Green
Tenon Top Pole - Steel 35 ft	**ESPS35TZ**	213437	Dark Bronze (Brown)
Tenon Top Pole - Steel 35 ft	**ESPS35TV**	215474	Galvanized
Tenon Top Pole - Steel 35 ft	**ESPS35TL**	213436	Light Grey
Tenon Top Pole - Steel 35 ft	**ESPS35TD**	213433	Dark Grey
40 ft Poles			
Tenon Top Pole - Steel 40 ft	**ESPS40TK**	213425	Black
Tenon Top Pole - Steel 40 ft	**ESPS40TF**	213424	Federal Green
Tenon Top Pole - Steel 40 ft	**ESPS40TZ**	213439	Dark Bronze (Brown)
Tenon Top Pole - Steel 40 ft	**ESPS40TV**	213423	Galvanized
Tenon Top Pole - Steel 40 ft	**ESPS40TD**	213426	Dark Grey

Notes:
1. 3" OD Tenon Top poles need a slip fit type mast arm. See pages AM-1.00, AM-1.10, AM-2.00, AM-2.10, AM-3.00, and AM-4.00.
2. Design the foundation, pullbox, conductor, conduit, grounding, streetlight fusing and streetlight circuit fusing; see page ODL REF-INDEX.
3. Design Breakaway Supports (if needed); see pages ODL REF-4.20 and ODL REF-4.25.

STEEL POLE - TENON TOP
OVERHEAD FED - SIDE MOUNT LUMINAIRES

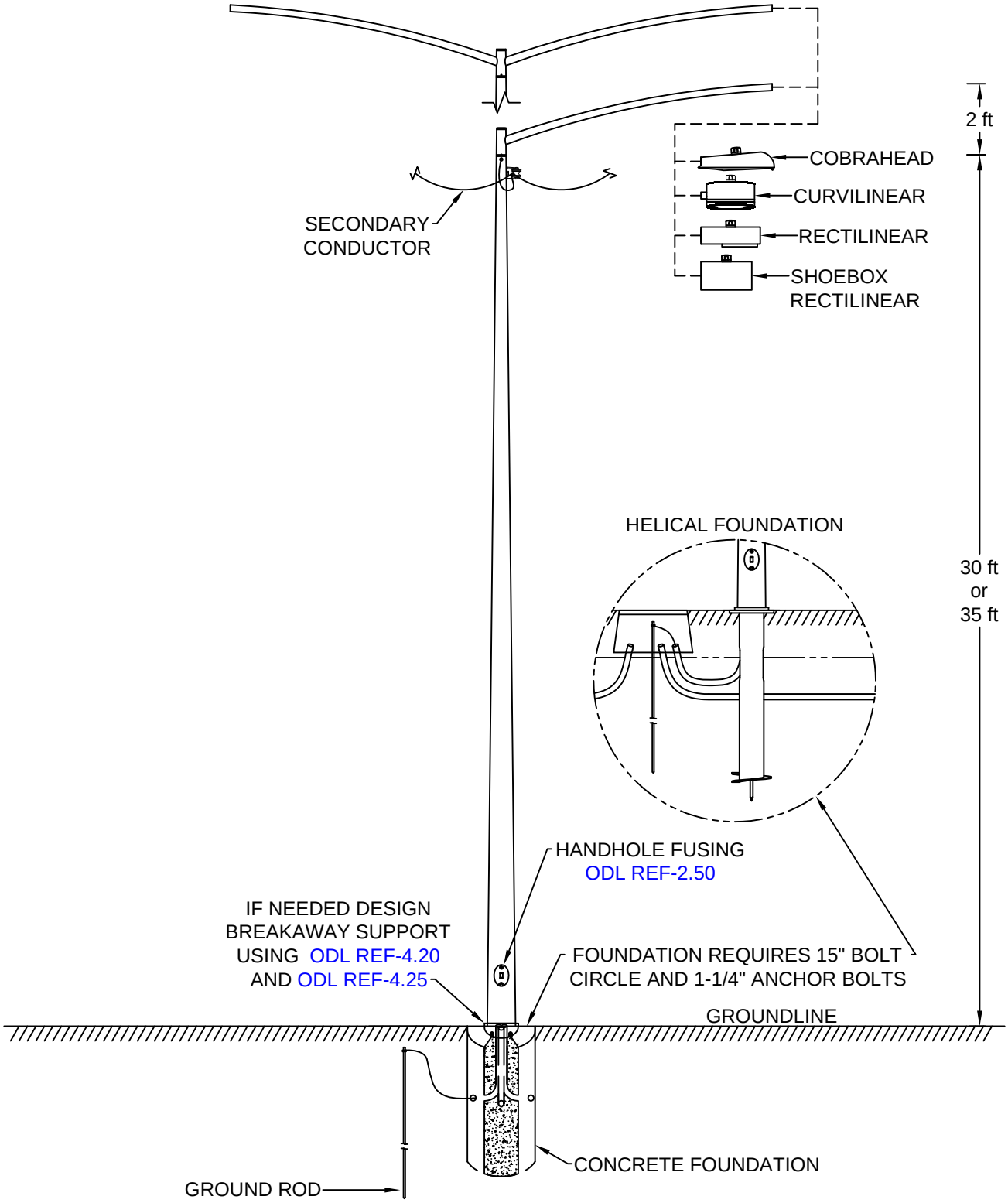

Xcel Energy	Issued	Replaces	Drawn by	Approved	File	OUTDOOR LIGHTING MANUAL
	Jan-16	New	JD	GWB	PL-_3.00	PAGE PL-3.00

OH FED STEEL POLE - TENON TOP
SIDE MOUNT LUMINAIRES

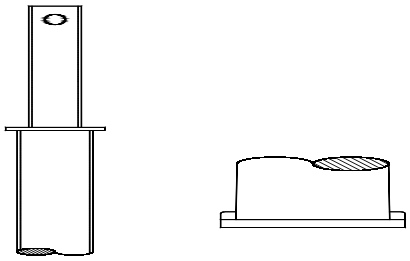

Galvanized - Foundation Mounted			
Description:	**C/U**	**Pole Cat ID**	**Color**
30 ft Poles Overhead Fed			
Tenon Top Pole - Steel 30 ft	**ESPS30TVO**	216117	Galvanized
35 ft Poles Overhead Fed			
Tenon Top Pole - Steel 35 ft	**ESPS35TVO**	216118	Galvanized

Notes:

1. 3" OD Tenon Top poles need a slip fit type mast arm. See pages AM-1.00, AM-1.10, AM-2.00, and AM-2.10 for approved arms.
2. Design for the foundation and conductor, see page ODL REF-4.10, ODL REF-4.15 and ODL REF-2.30. Only screw-in foundations are rated for OH fed steel poles, foundations can also be poured in place using a qualified concrete company. Please contact EDS with any questions.
3. Do not design Breakaway Supports for any overhead fed poles for streetlights.

STEEL POLE - TENON TOP
POST TOP AND PENDANT LUMINAIRES

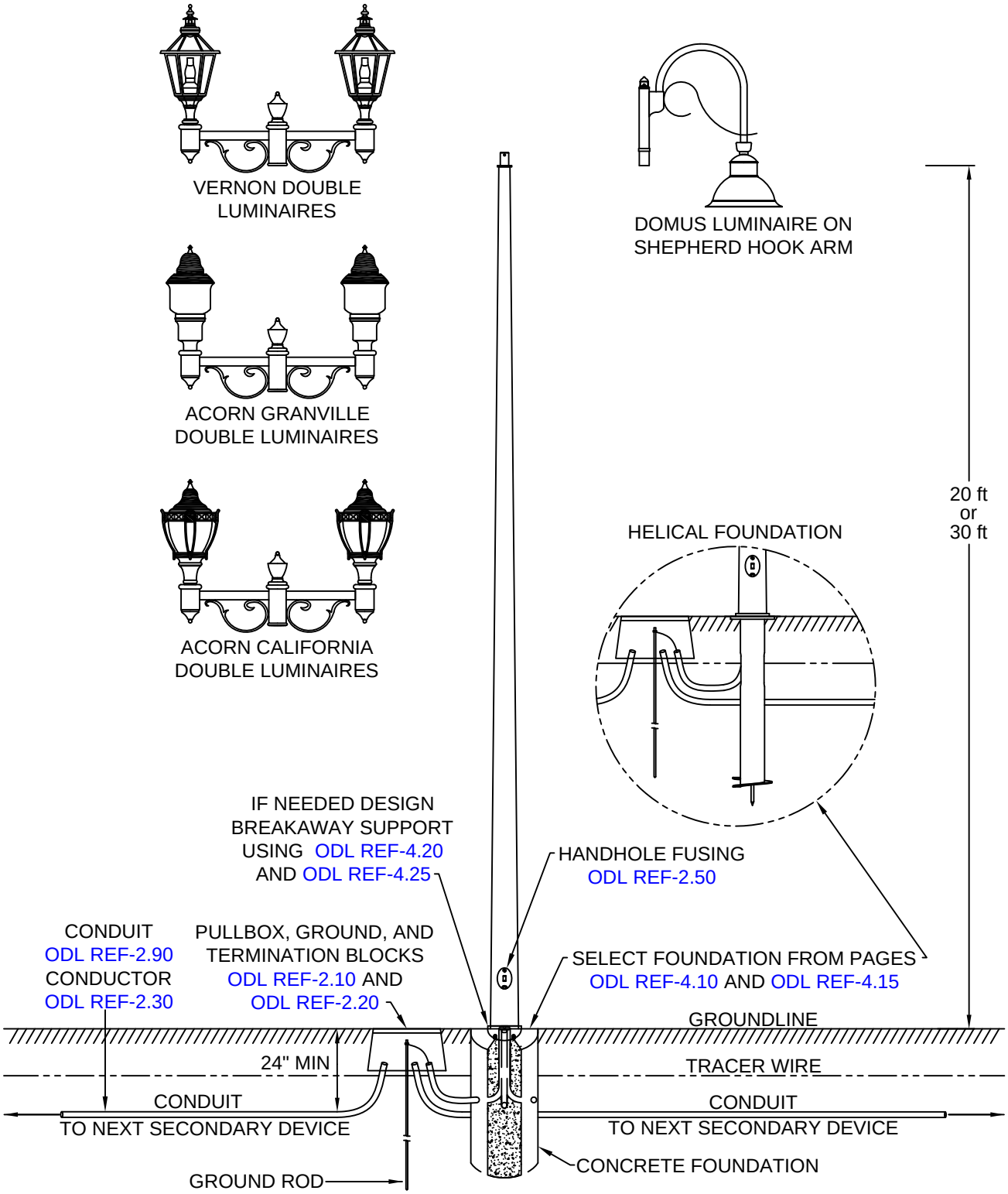

Xcel Energy	Issued	Replaces	Drawn by	Approved	File	OUTDOOR LIGHTING MANUAL
	Jan-16	New	JD	GWB	PL-_4.00	PAGE PL-4.00

STEEL POLE - TENON TOP
POST TOP AND PENDANT LUMINAIRES

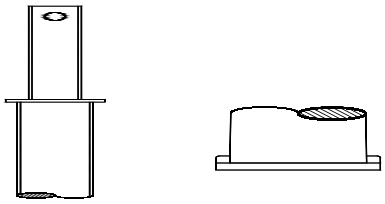

Galvanized Painted Steel - Foundation Mounted			
Description: Round Plain	**C/U**	**Pole Cat ID**	**Color**
Tenon Top Pole - Steel 20 ft	**ESPS20TF**	216345	Federal Green
Tenon Top Pole - Steel 20 ft	**ESPS20TK**	54446	Black
Tenon Top Pole - Steel 30 ft	**ESPS30TK**	213432	Black
Tenon Top Pole - Steel 20 ft	**ESPS20TV**	217679	Galvanized
Tenon Top Pole - Steel 20 ft	**ESPS20TL**	217814	Light Grey

Notes:
1. 3" OD Tenon Top poles need a post top luminaire. See pages LM-8.00, LM-9.00, LM-15.00, and LM-16.00.
2. Design only Acorn and Vernon for post top style luminaires and only the Domus luminaire for the pendant style luminaire(s). The Vernon luminaires shall only be mounted on the 20 ft. poles.
3. Design the foundation, pullbox, conductor, conduit, grounding, streetlight fusing and streetlight circuit fusing; see ODL REF-INDEX.
4. Design Breakaway Supports (if needed); see pages ODL REF-4.20 and ODL REF-4.25.

STEEL FLUTED POLE
PENDANT LUMINAIRE - EVANS

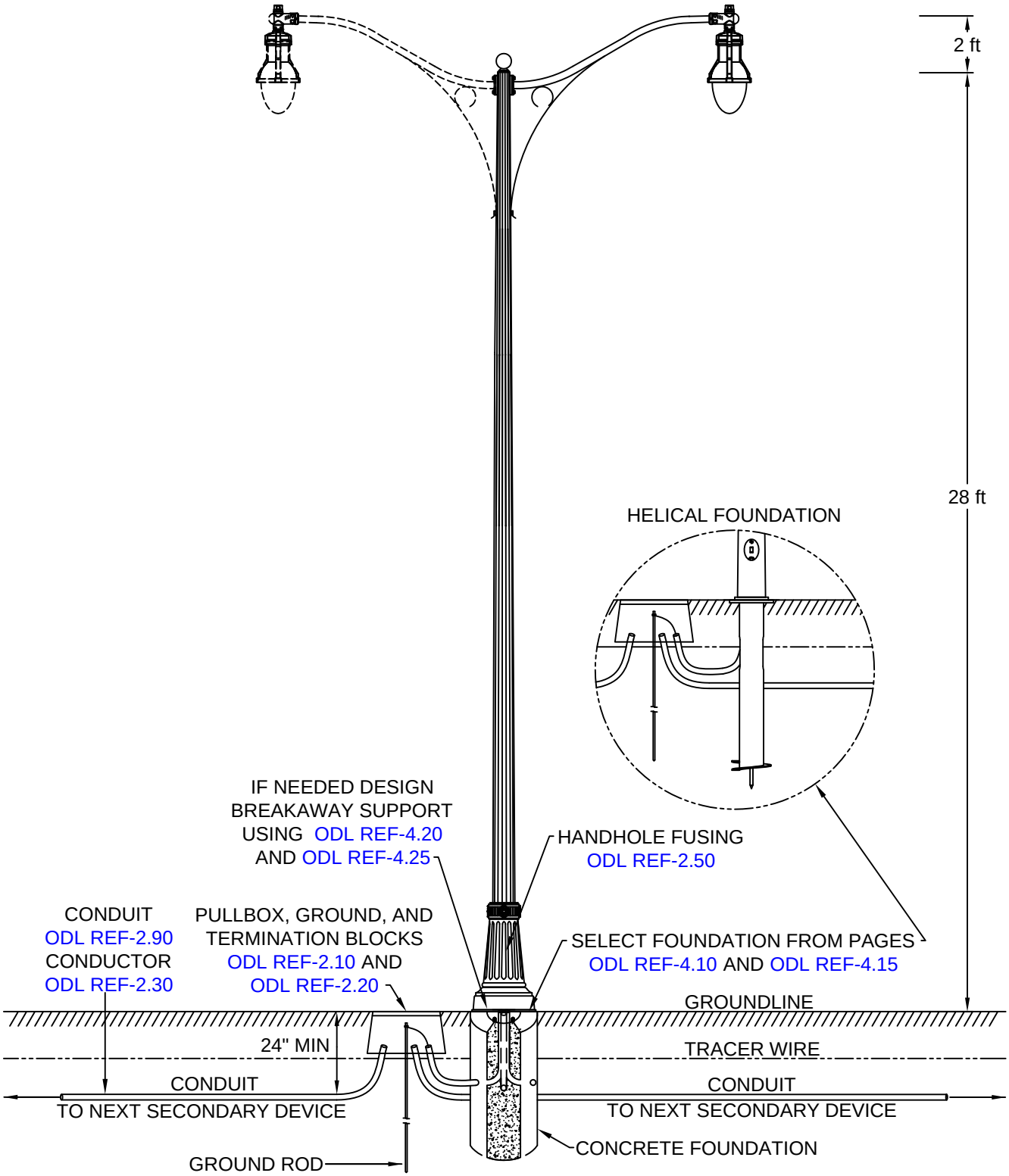

Xcel Energy	Issued	Replaces	Drawn by	Approved	File	OUTDOOR LIGHTING MANUAL
	Jan-16	New	JD	GWB	PL-_5.00	PAGE PL-5.00

FLUTED STEEL POLE - TWO BOLT
EVANS PENDANT LUMINAIRE

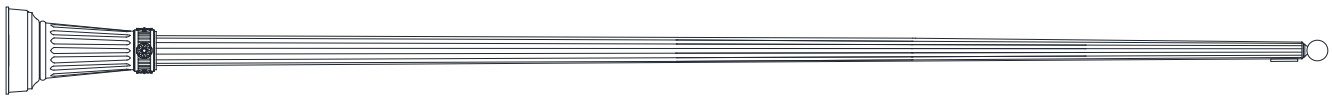

Painted Steel Fluted - Foundation Mounted			
Description: Round Fluted	**C/U**	**Pole Cat ID**	**Color**
28 ft Poles - Foundation Mounted			
Two Bolt Pole - Steel 28 ft With Elastomer base (Cat ID 216680)	**ESPS28EBK**	216674	Black
Two Bolt Pole - Steel 28 ft With Elastomer base (Cat ID 220769)	**ESPS28EBF**	220770	Federal Green
Two Bolt Pole - Steel 28 ft With Elastomer base (Cat ID 216704)	**ESPS28EBG**	216676	Dark Green
Two Bolt Pole - Steel 28 ft With Elastomer base (Cat ID 216703)	**ESPS28EBZ**	216675	Dark Bronze (Brown)

Notes:
1. Two Bolt Evans poles shall only be designed for the Evans Luminaire. See page LM-17.00.
2. Design the foundation, pull box, conductor, conduit, grounding, streetlight fusing and streetlight circuit fusing; see ODL REF-INDEX.
3. Design Breakaway Supports (if needed); see pages ODL REF-4.20 and ODL REF-4.25.
4. Dark green poles are only approved for NSPM. See page ODL REF-0.25 for approved colors by Operating Company.

ALUMINUM POLE - SURFACE MOUNT
SIDE MOUNTED LUMINAIRES
NSPM ONLY

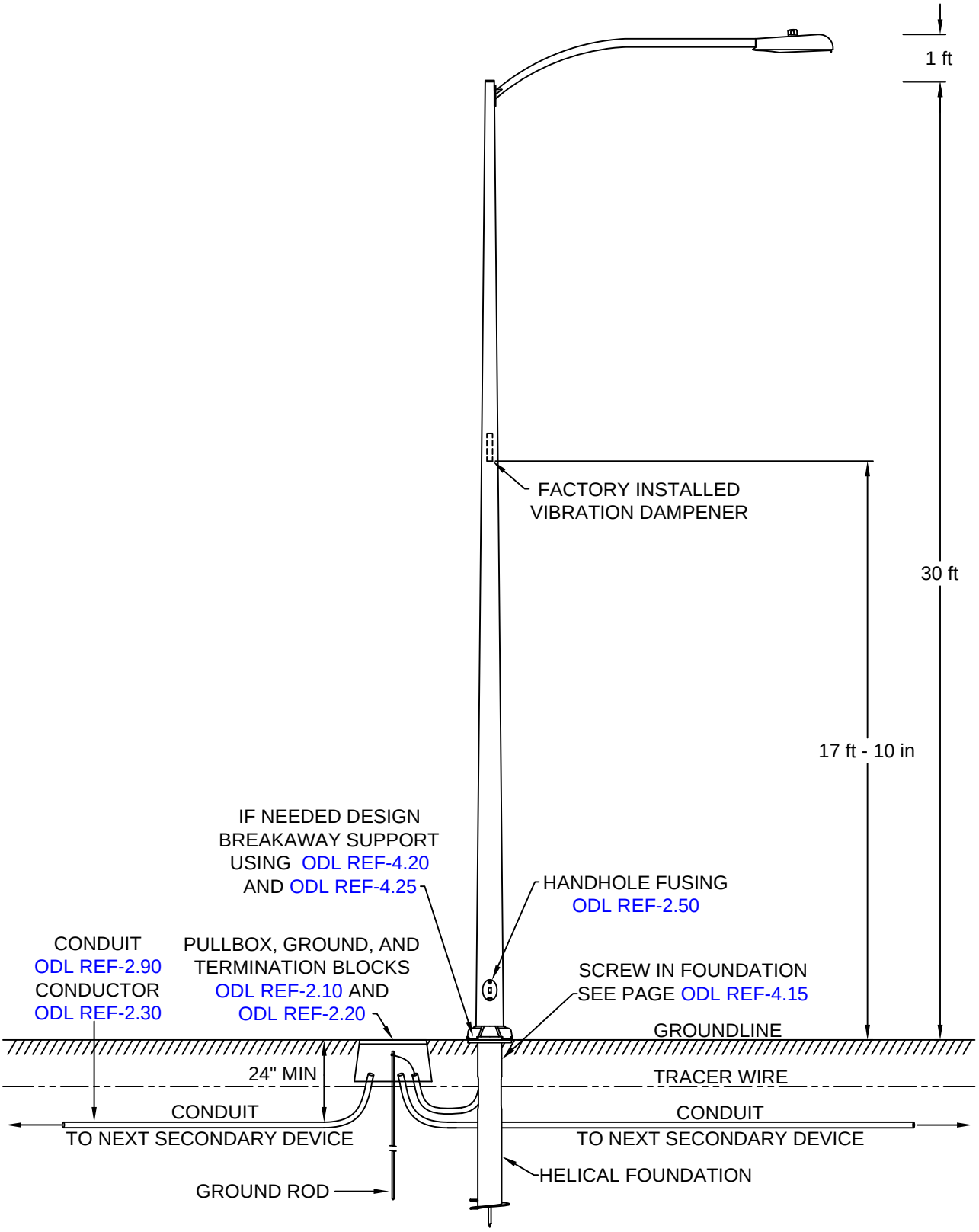

Xcel Energy	Issued	Replaces	Drawn by	Approved	File	OUTDOOR LIGHTING MANUAL
	Jan-16	New	JD	GWB	PL-_6.00	PAGE PL-6.00

ALUMINUM POLE - SURFACE MOUNT
SIDE MOUNT LUMINAIRES
NSPM ONLY

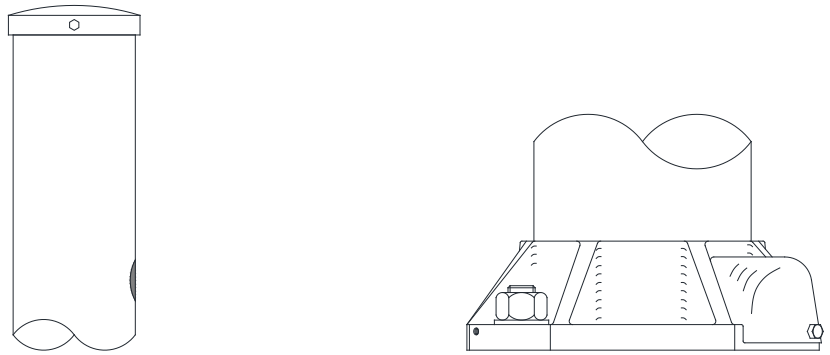

Aluminum - Foundation Mounted			
Description:	**C/U**	**Pole Cat ID**	**Color**
30 ft Poles			
Surface Mount Pole - Aluminum 30 ft	**ESPA30SK**	209206	Black
Surface Mount Pole - Aluminum 30 ft	**ESPA30SG**	106634	Dark Green
Surface Mount Pole - Aluminum 30 ft	**ESPA30SZ**	106589	Dark Bronze (Brown)

Notes:
1. 4-1/2" OD Surface Mount poles need an aluminum mast arm. See page AM-8.00 for approved Aluminum mast arms.
2. Design only Cobrahead style and Rectilinear style luminaires.
3. Design the foundation, pullbox, conductor, conduit, grounding, streetlight fusing and streetlight circuit fusing; see page ODL REF-INDEX.
4. Design Breakaway Supports (if needed); see pages ODL REF-4.20 and ODL REF-4.25.

ALUMINUM POLE - TENON TOP
POST TOP LUMINAIRES
DIRECT BURIED

ACORN WASHINGTON LUMINAIRE | ACORN GRANVILLE LUMINAIRE | ACORN CALIFORNIA LUMINAIRE | TRADITIONAL BASIC LUMINAIRE | TRADITIONAL COLONIAL LUMINAIRE

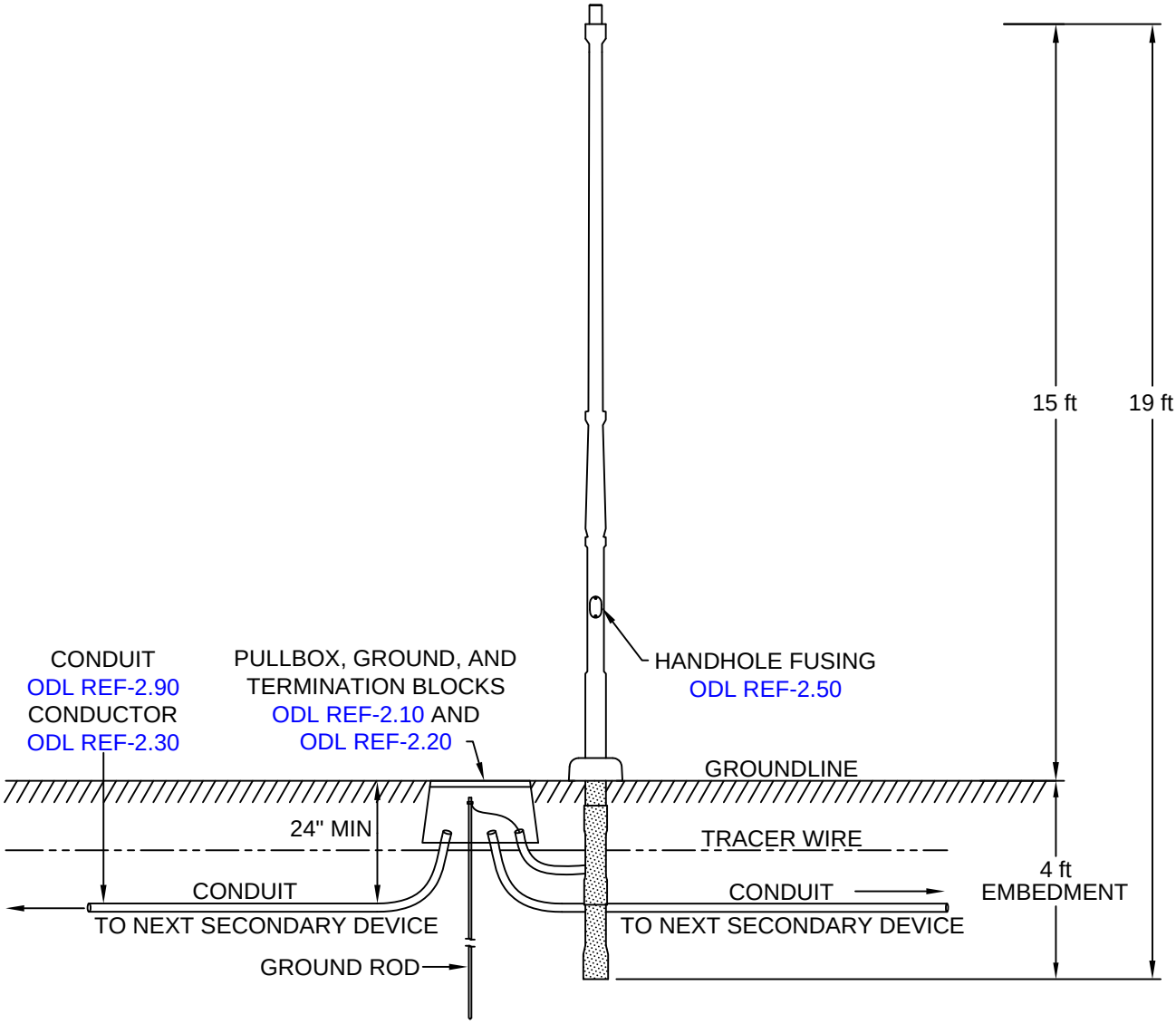

Notes:

1. This is the "Columbus" pole. Only design for approved luminaires.

Xcel Energy	Issued	Replaces	Drawn by	Approved	File	OUTDOOR LIGHTING MANUAL
	Jan-16	New	JD	GWB	PL-_7.00	PAGE PL-7.00

ALUMINUM POLE - TENON TOP
POST TOP LUMINAIRES
DIRECT BURIED

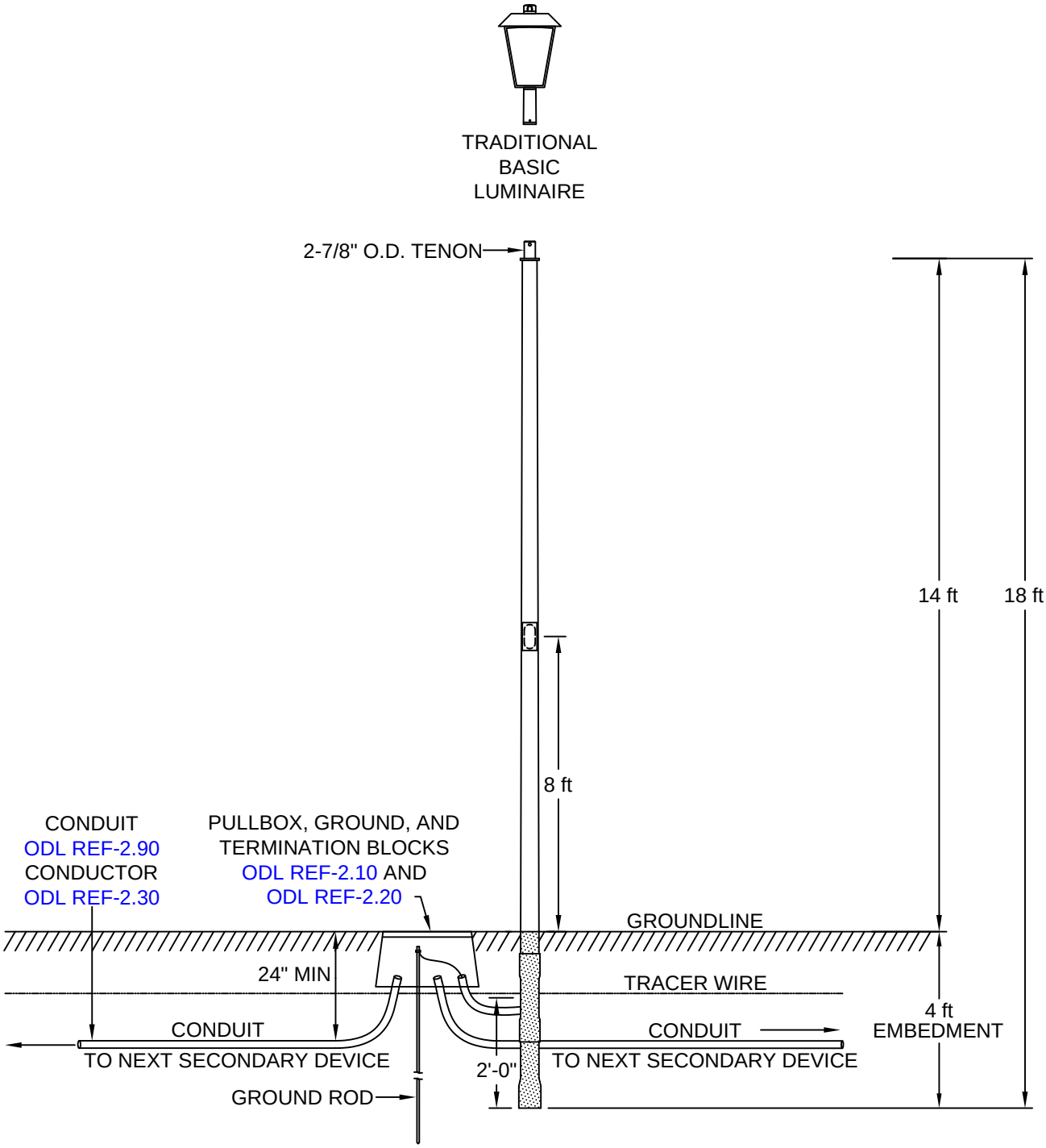

Notes:
ONLY DESIGN FOR THE APPROVED LUMINAIRE TO AVOID OVERLOADING POLE.

ALUMINUM POLE - TENON TOP
POST TOP LUMINAIRES
FOUNDATION MOUNTED

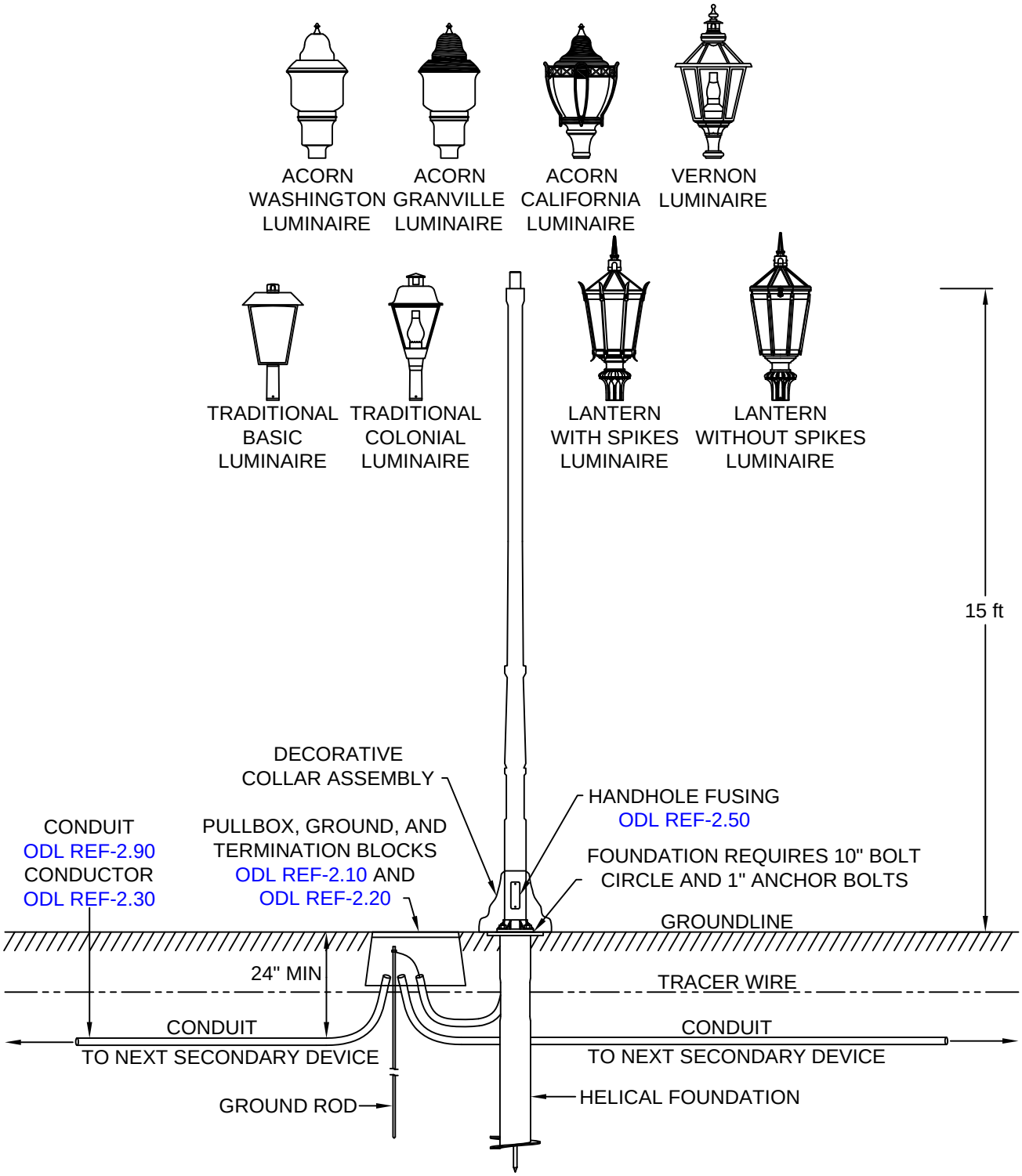

Notes:

1. This is the "Columbus" pole. Only design for approved luminaires.

Xcel Energy	Issued	Replaces	Drawn by	Approved	File	OUTDOOR LIGHTING MANUAL
	Jan-16	New	JD	GWB	PL-_7.50	PAGE PL-7.50

ALUMINUM POLE - TENON TOP
POST TOP LUMINAIRES

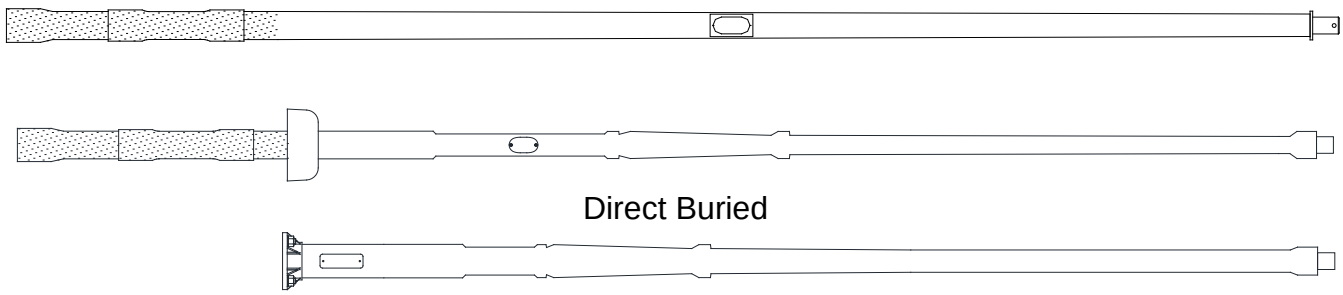

Direct Buried

Foundation Mounted

Aluminum			
Description:	**C/U**	**Pole Cat ID**	**Color**
Direct Buried[5] - Tapered Smooth			
Tenon Top Pole - Aluminum 19 ft[4]	**ESPA18TK**	212067	Black
Tenon Top Pole - Aluminum 19 ft[4]	**ESPA18TG**	212068	Dark Green
Tenon Top Pole - Aluminum 19 ft[4]	**ESPA18TZ**	209085	Dark Bronze (Brown)
Direct Buried[5] - Columbus			
Tenon Top Pole - Aluminum 19 ft[4]	**ESPA19TK**	212069	Black
Tenon Top Pole - Aluminum 19 ft[4]	**ESPA19TG**	209076	Dark Green
Tenon Top Pole - Aluminum 19 ft[4]	**ESPA19TZ**	212070	Dark Bronze (Brown)
Foundation Mounted - Columbus			
Tenon Top Pole - Aluminum 15 ft	**ESPA15TK**	212061	Black
Tenon Top Pole - Aluminum 15 ft	**ESPA15TG**	106579	Dark Green
Tenon Top Pole - Aluminum 15 ft	**ESPA15TZ**	212062	Dark Bronze (Brown)

Notes:
1. 3" OD Tenon Top poles need a pole top luminaire or the approved arms. See pages LM-INDEX for the standard Post Top luminaires.
2. Design for Traditional, Lantern, Acorn, and Vernon luminaires only.
3. Design the foundation, pullbox, conductor, conduit, grounding, streetlight fusing and streetlight circuit fusing; see ODL REF-INDEX.
4. Only design for the approved luminaires to avoid overloading the pole. See approved luminaires on pages PL-7.00 (Acorns and Traditional - Basic) and PL-7.25 (Traditional - Basic). Please contact Electric Distribution Standards for any requests to install other luminaires.
5. Pole is direct embedment with 4 ft embedment depth with no foundation required.

FLUTED ALUMINUM POLE - TENON TOP
POST TOP AND PENDANT LUMINAIRES

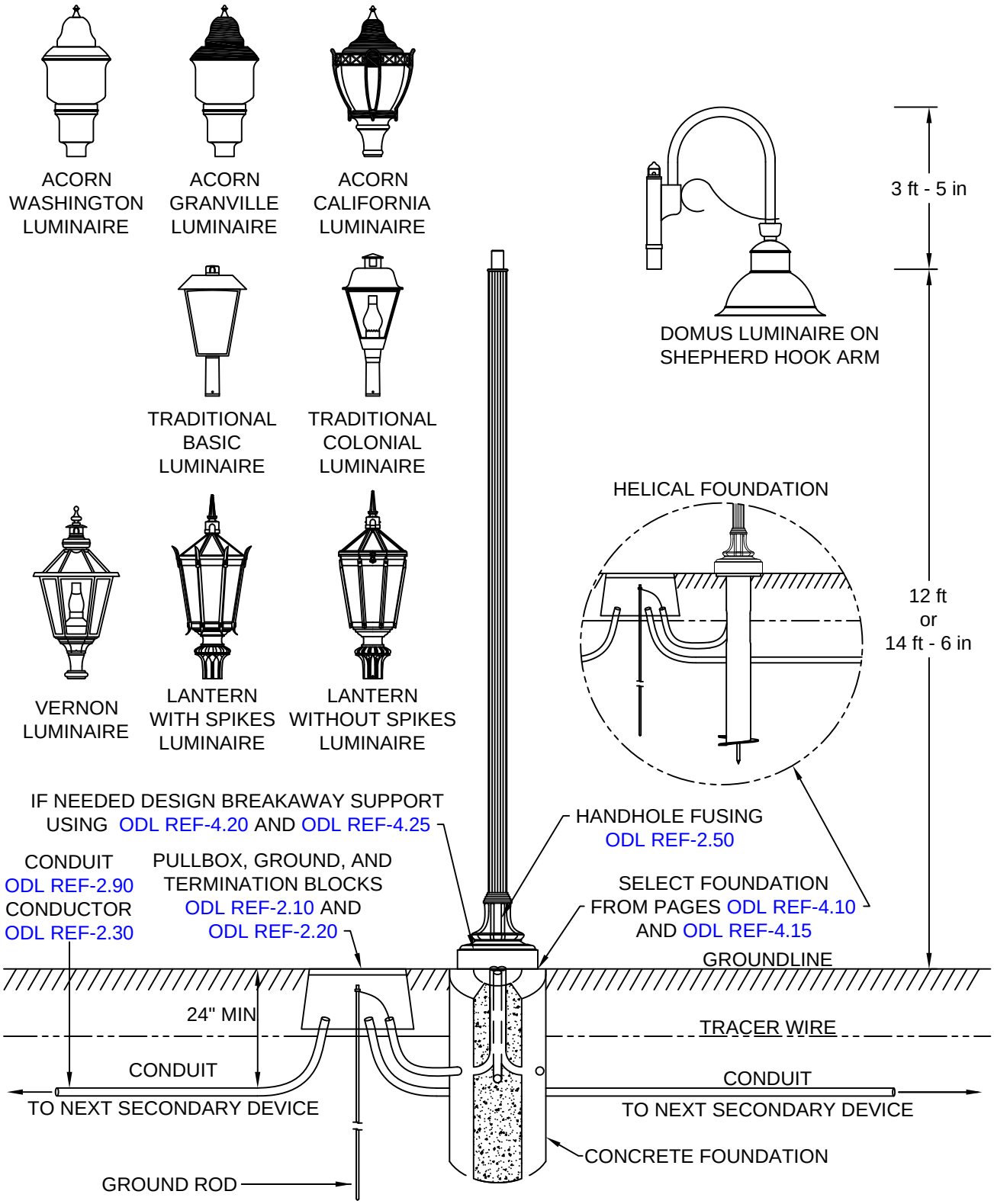

Xcel Energy	Issued	Replaces	Drawn by	Approved	File	OUTDOOR LIGHTING MANUAL
	Jan-16	New	JD	GWB	PL-_8.00	PAGE PL-8.00

FLUTED ALUMINUM POLE - TENON TOP POST TOP AND PENDANT LUMINAIRES

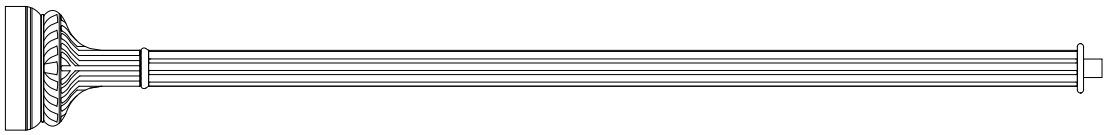

Aluminum Fluted - Foundation Mounted			
Description: Round Fluted	**C/U**	**Pole Cat ID**	**Color**
12 ft Poles - Foundation Mounted			
Tenon Top Pole - Aluminum 12 ft With Elastomer Base (Cat ID No. 211259)	**ESPA12TK**	214314	Black
Tenon Top Pole - Aluminum 12 ft With Elastomer Base (Cat ID No. 214316)	**ESPA12TF**	214315	Federal Green
14 ft - 6” Poles - Foundation Mounted			
Tenon Top Pole - Aluminum 14 ft - 6”	**ESPA14TK**	106586	Black
Tenon Top Pole - Aluminum 14 ft - 6”	**ESPA14TG**	106635	Dark Green
Tenon Top Pole - Aluminum 14 ft - 6”	**ESPA14TZ**	209208	Dark Bronze (Brown)

Notes:
1. 3” OD Tenon Top poles need a Post Top luminaire or an appropriate arm for the Domus luminaire. Design Domus and post top mounted luminaires from pages LM-INDEX.
2. Design only Domus, Traditional , Lantern, Acorn and Vernon style luminaires
3. Design the foundation, pullbox, conductor, conduit, grounding, and streetlight fusing and streetlight circuit fusing; see ODL REF-INDEX.

FIBERGLASS POLE - SURFACE MOUNT
SIDE MOUNT LUMINAIRES
NSPM ONLY

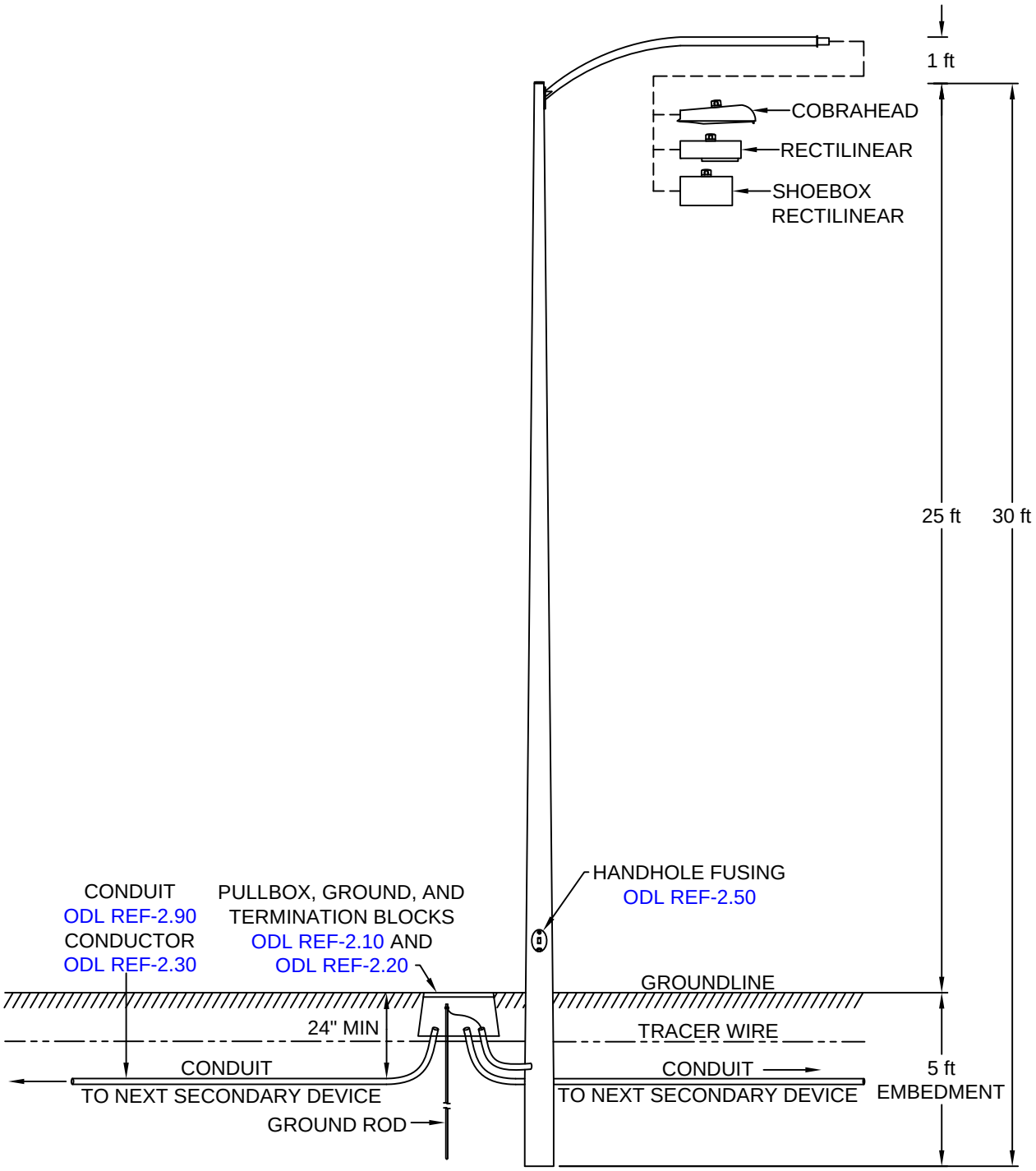

NOTE: FIBERGLASS POLES ARE DIRECT BURIED. FOUNDATION AND POLE GROUNDING NOT NEEDED. NESC REQUIREMENT OF A MINIMUM OF 4 GROUNDS PER MILE MUST STILL BE SATISFIED IN DESIGN. SEE PAGES ODL CONST-INDEX AND ODL REF-INDEX FOR MORE GUIDANCE FOR STREET LIGHT CIRCUIT GROUNDING.

FIBERGLASS POLE - SURFACE MOUNT
FOR SIDE MOUNT LUMINAIRES-NSPM ONLY

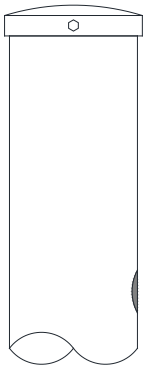

Fiberglass - Direct Buried			
Description: Round Tapered	**C/U**	**Pole Cat ID**	**Color**
30 ft Poles - Direct Buried			
Surface Mount Pole - Fiberglass 30 ft length (5 ft embedment). Above ground height is 25 ft	**ESPF30SK**	217174	Black
Surface Mount Pole - Fiberglass 30 ft length (5 ft embedment). Above ground height is 25 ft	**ESPF30SG**	217173	Dark Green
Surface Mount Pole - Fiberglass 30 ft length (5 ft embedment). Above ground height is 25 ft	**ESPF30SZ**	106584	Dark Bronze (Brown)

Notes:
1. 4-1/2" OD Surface Mount poles need an aluminum mast arm. See page AM-8.00 for approved aluminum arms.
2. Design for only Cobrahead and Rectilinear style Side Mount luminaires
3. Pole is direct embedment with a 5 ft embedment depth. Foundation and pole grounding are not needed for direct buried fiberglass poles. NESC requirement of a minimum of 4 grounds per circuit mile must still be satisfied in design. See the ODL REF-INDEX and ODL REF-CONST sections for more information on grounding streetlight circuit.
4. Design the pullbox, conductor, conduit, grounding, streetlight fusing and streetlight circuit fusing, see page ODL REF-INDEX.

FIBERGLASS POLE - TENON TOP SIDE MOUNT LUMINAIRES

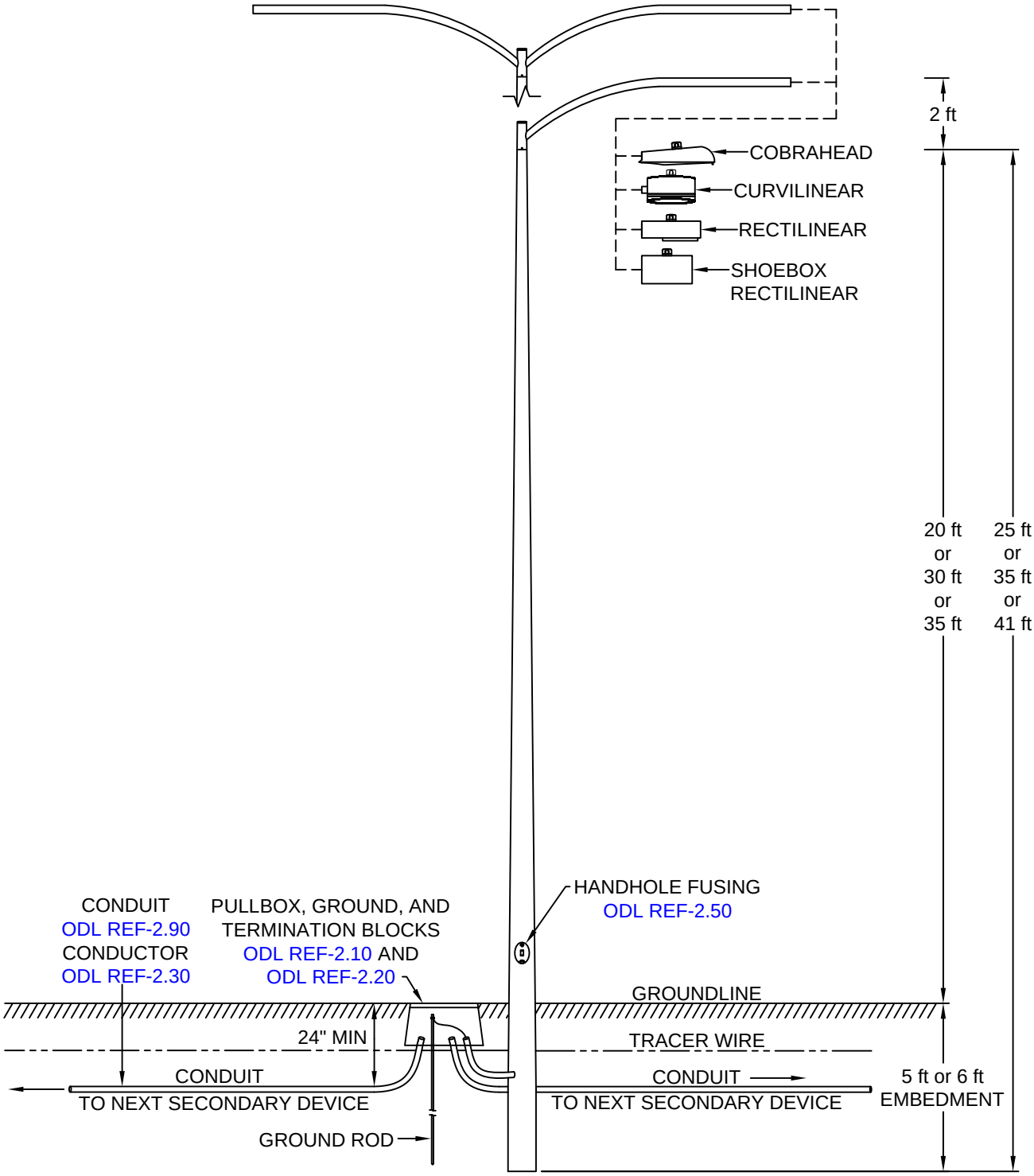

NOTE: FIBERGLASS POLES ARE DIRECT BURIED. FOUNDATION AND POLE GROUNDING NOT NEEDED. NESC REQUIREMENT OF A MINIMUM OF 4 GROUNDS PER MILE MUST STILL BE SATISFIED IN DESIGN. SEE PAGES ODL CONST-INDEX AND ODL REF-INDEX FOR MORE GUIDANCE FOR STREET LIGHT CIRCUIT GROUNDING.

FIBERGLASS POLE - TENON TOP - SPOKE ARM SIDE MOUNT LUMINAIRES

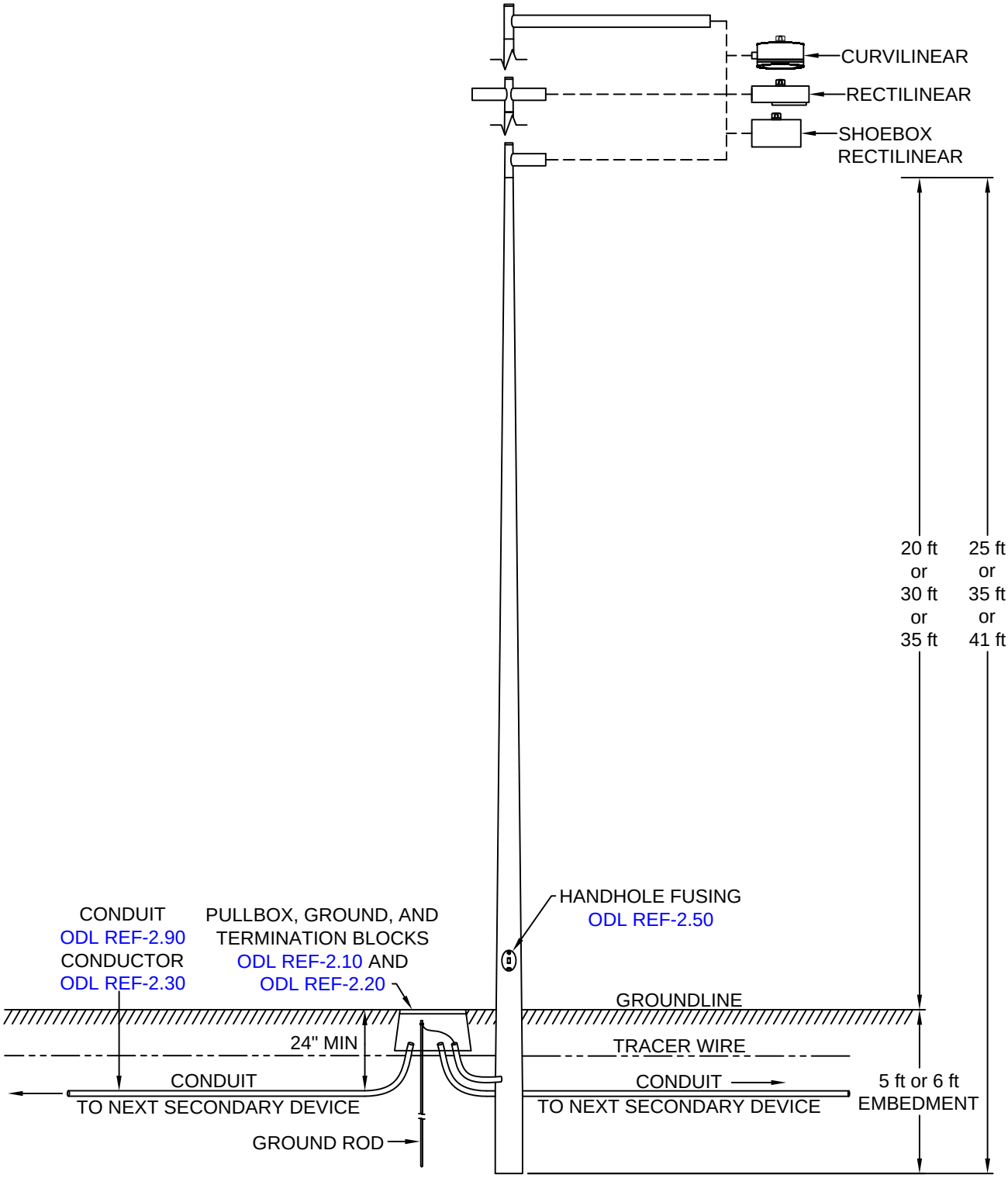

NOTE: FIBERGLASS POLES ARE DIRECT BURIED. FOUNDATION AND POLE GROUNDING NOT NEEDED. NESC REQUIREMENT OF A MINIMUM OF 4 GROUNDS PER MILE MUST STILL BE SATISFIED IN DESIGN. SEE PAGES ODL CONST-INDEX AND ODL REF-INDEX FOR MORE GUIDANCE FOR STREET LIGHT CIRCUIT GROUNDING.

FIBERGLASS POLE - TENON TOP
FOR SIDE MOUNT LUMINAIRES

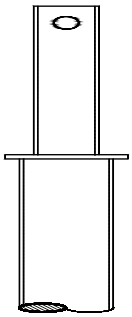

Fiberglass - Direct Buried

Description:	C/U	Pole Cat ID	Color
35 ft Poles - Direct Buried			
3” OD Tenon Top Pole - Fiberglass 35 ft length (5 ft embedment) Above ground height is 30 ft	**ESPF35TF**	220446	Federal Green
3” OD Tenon Top Pole - Fiberglass 35 ft length (5 ft embedment) Above ground height is 30 ft	**ESPF35TK**	214313	Black
3” OD Tenon Top Pole - Fiberglass 35 ft length (5 ft embedment) Above ground height is 30 ft	**ESPF35TZ**	213449	Dark Bronze (Brown)
41 ft Poles - Direct Buried			
3” OD Tenon Top Pole - Fiberglass 41 ft length (6 ft embedment) Above ground height is 35 ft	**ESPF41TK**	216120	Black
3” OD Tenon Top Pole - Fiberglass 41 ft length (6 ft embedment) Above ground height is 35 ft	**ESPF41TZ**	216121	Dark Bronze (Brown)
47 ft Poles - Direct Buried			
3” OD Tenon Top Pole - Fiberglass 47 ft length (6 ft embedment) Above ground height is 40 ft	**ESPF47TK**	216122	Black
47 ft Poles - Direct Buried			
3” OD Tenon Top Pole - Fiberglass 47 ft length (6 ft embedment) Above ground height is 40 ft	**ESPF47TZ**	216123	Dark Bronze (Brown)

Notes:

1. All standard Side Mount luminaires will need a 2-3/8” OD mast arm designed to fit 3” OD Tenon Top pole. See page LM-INDEX for standard tenon arms.
2. Pole is direct embedment with 5 ft or 6 ft embedment depth. Foundation and pole grounding are not needed for direct buried fiberglass poles. NESC requirement of a minimum of 4 grounds per circuit mile must still be satisfied in design. See the ODL REF-INDEX and ODL REF-CONST sections for more information on grounding streetlight circuits.
3. Design the pullbox, conductor, conduit, grounding, streetlight fusing and streetlight circuit fusing; see page ODL REF-INDEX.

FIBERGLASS POLE - TENON TOP
POST TOP LUMINAIRES

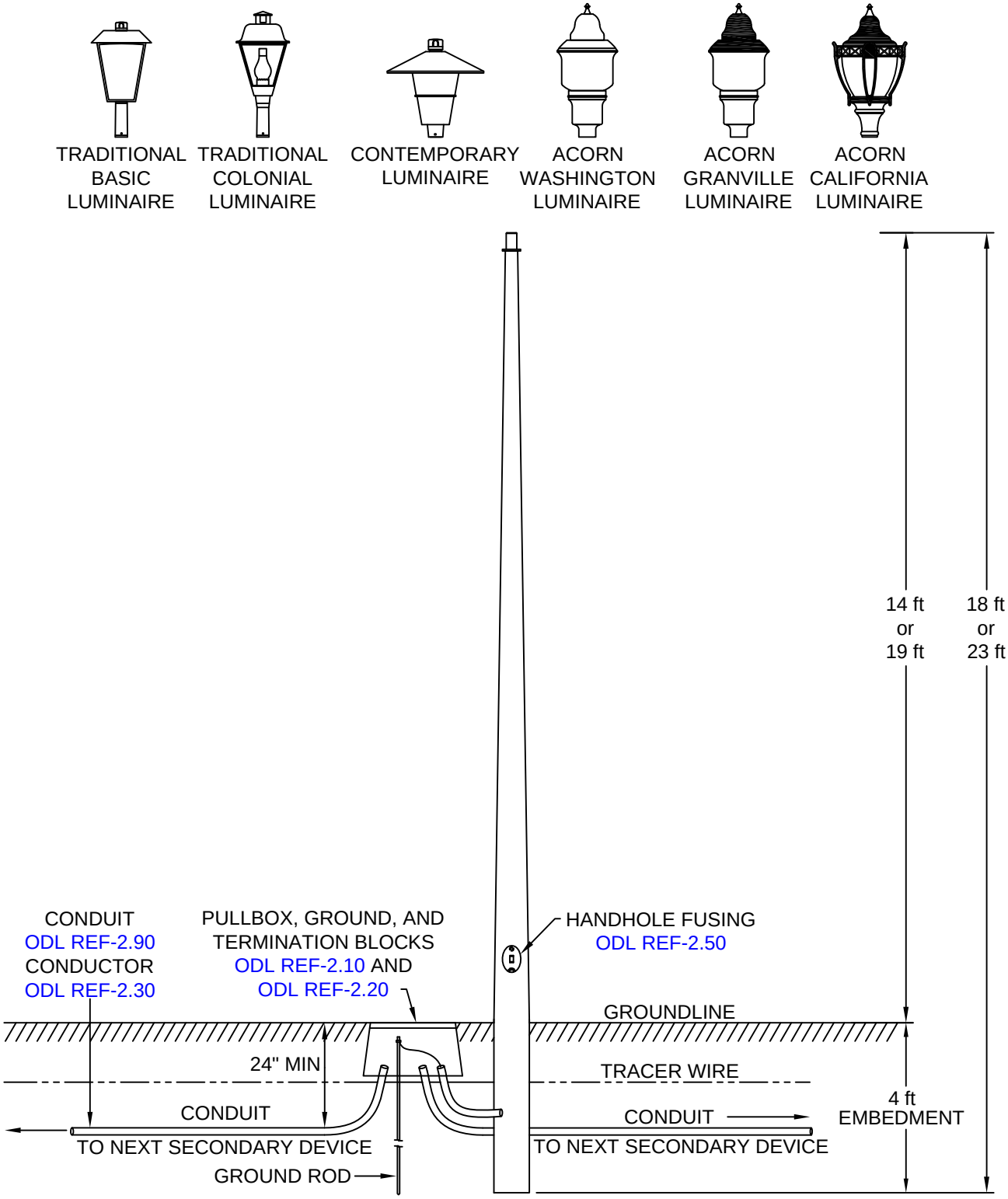

NOTE: FIBERGLASS POLES ARE DIRECT BURIED. FOUNDATION AND POLE GROUNDING NOT NEEDED. NESC REQUIREMENT OF A MINIMUM OF 4 GROUNDS PER MILE MUST STILL BE SATISFIED IN DESIGN. SEE PAGES ODL CONST-INDEX AND ODL REF-INDEX FOR MORE GUIDANCE FOR STREET LIGHT CIRCUIT GROUNDING.

FIBERGLASS POLE - TENON TOP
FOR POST TOP LUMINAIRES

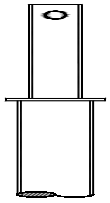

Fiberglass - Direct Buried			
Description: Round Plain	**C/U**	**Pole Cat ID**	**Color**
30 ft Poles - Direct Buried			
Tenon Top Pole - Fiberglass 30 ft (5 ft embedment) 25 ft mounting height	**ESPF30TL**	219897	Light Grey
25 ft Poles - Direct Buried			
Tenon Top Pole - Fiberglass 25 ft (5 ft embedment) 20 ft mounting height	**ESPF25TK**	214357	Black
Tenon Top Pole - Fiberglass 25 ft (5 ft embedment) 20 ft mounting height	**ESPF25TZ**	214358	Dark Bronze (Brown)
23 ft Poles - Direct Buried			
Tenon Top Pole - Fiberglass 23 ft (5 ft embedment) 18 ft mounting height	**ESPF23TK**	54217	Black
Tenon Top Pole - Fiberglass 23 ft (5 ft embedment) 18 ft mounting height	**ESPF23TL**	54226	Light Grey
18ft Poles - Direct Buried			
Tenon Top Pole - Fiberglass 18 ft (4 ft embedment) 14 ft mounting height	**ESPF18TK**	216359	Black
Tenon Top Pole - Fiberglass 18 ft (4 ft embedment) 14 ft mounting height	**ESPF18TZ**	106580	Dark Bronze (Brown)

Notes:
1. 3" OD Tenon Top poles need a Post Top luminaire. See the Luminaires section LM-INDEX for approved Post Top luminaires. Design for Acorn, Traditional and Contemporary luminaires only.
2. Poles are direct embedment with 4 ft or 5 ft embedment depth. Foundation and pole grounding are not needed for direct buried fiberglass poles. See the ODL REF-INDEX and ODL REF-CONST sections for more information on grounding streetlight circuits.
3. Design the pullbox, conductor, conduit, grounding, streetlight fusing and streetlight circuit fusing; see ODL REF-INDEX.

FLUTED FIBERGLASS POLE - TENON TOP POST TOP LUMINAIRES

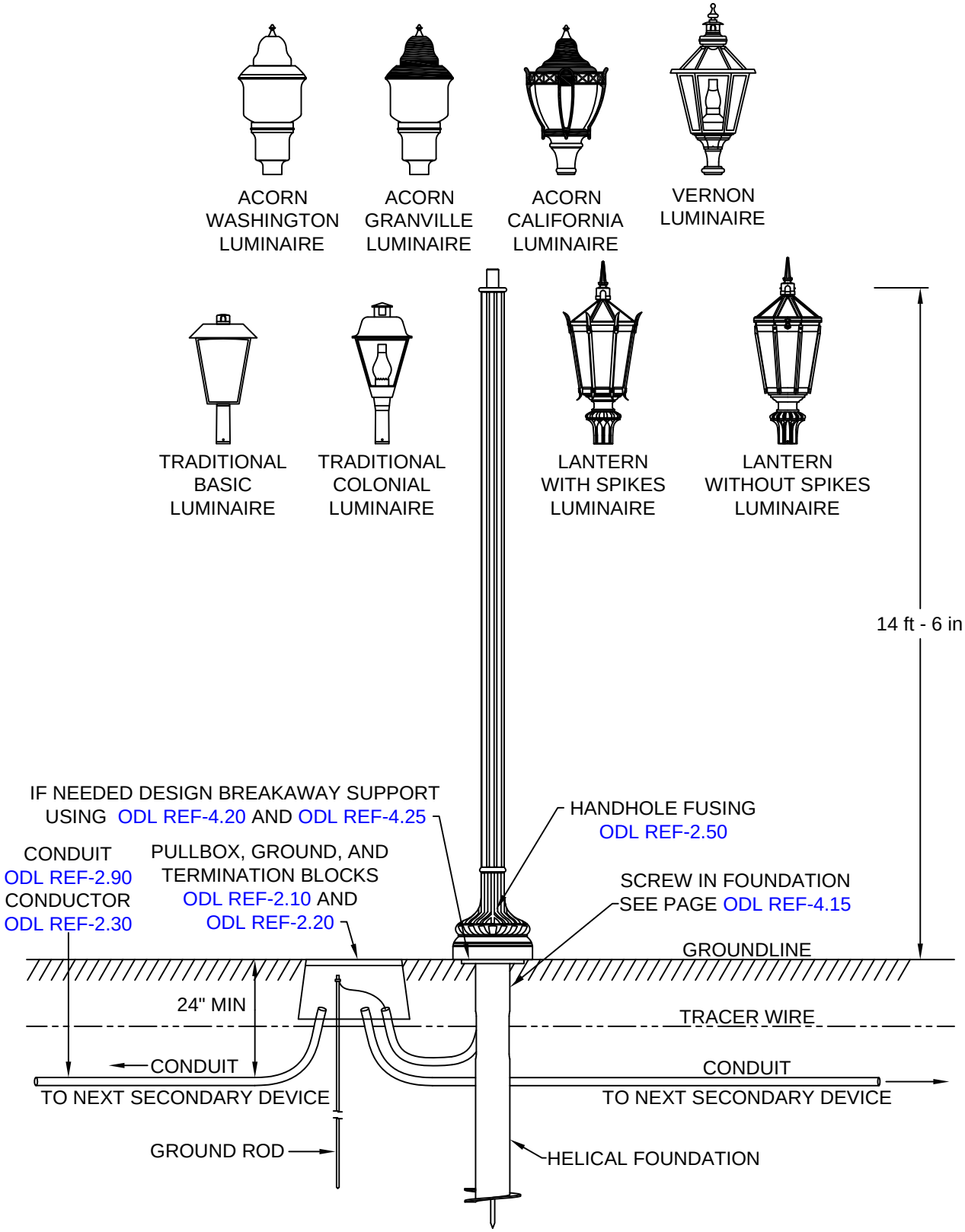

NOTE: FOUNDATION AND POLE GROUNDING NOT NEEDED. NESC REQUIREMENT OF A MINIMUM OF 4 GROUNDS PER MILE MUST STILL BE SATISFIED IN DESIGN. SEE PAGES ODL CONST-INDEX AND ODL REF-INDEX FOR MORE GUIDANCE FOR STREET LIGHT CIRCUIT GROUNDING.

FLUTED FIBERGLASS POLE - TENON TOP FOR POST TOP LUMINAIRES

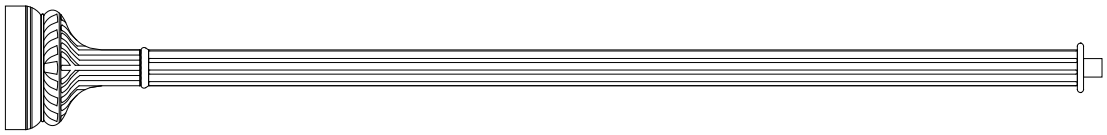

Fiberglass Fluted - Foundation Mounted			
Description: Round Fluted	**C/U**	**Pole Cat ID**	**Color**
14 ft - 6” Poles - Foundation Mounted			
Tenon Top Pole - Fiberglass 14 ft - 6”	**ESPF14TK**	106581	Black
Tenon Top Pole - Fiberglass 14 ft - 6”	**ESPF14TF**	217823	Federal Green
Tenon Top Pole - Fiberglass 14 ft - 6”	**ESPF14TG**	106649	Dark Green
Tenon Top Pole - Fiberglass 14 ft - 6”	**ESPF14TZ**	106648	Dark Bronze (Brown)

Notes:

1. 3” OD Tenon Top poles need a Post Top luminaire. See pages LM-INDEX for all post top mounted luminaires. Design for Acorn, Lantern and Traditional style luminaires only.
2. Design the foundation, pullbox, conductor, conduit, grounding, streetlight fusing and streetlight circuit fusing; see ODL REF-INDEX.

WOOD POLE - UNDERGROUND FED
SIDE MOUNT - COBRAHEAD LUMINAIRE

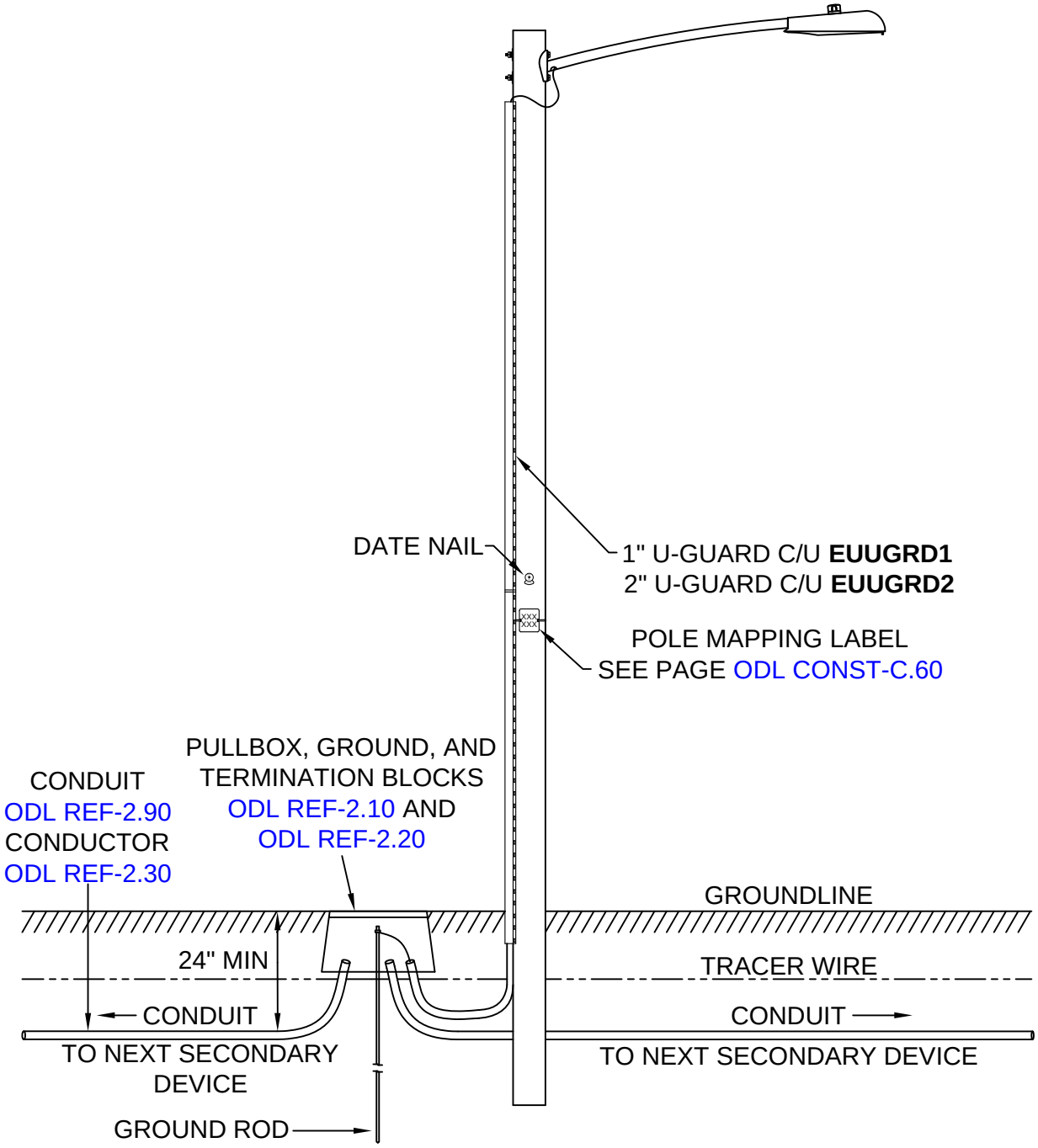

Notes:
1. Position mast arm perpendicular to street.
2. See page L-A in the Underground Manual for additional U-guard.

WOOD POLE - OVERHEAD FED COBRAHEAD LUMINAIRE

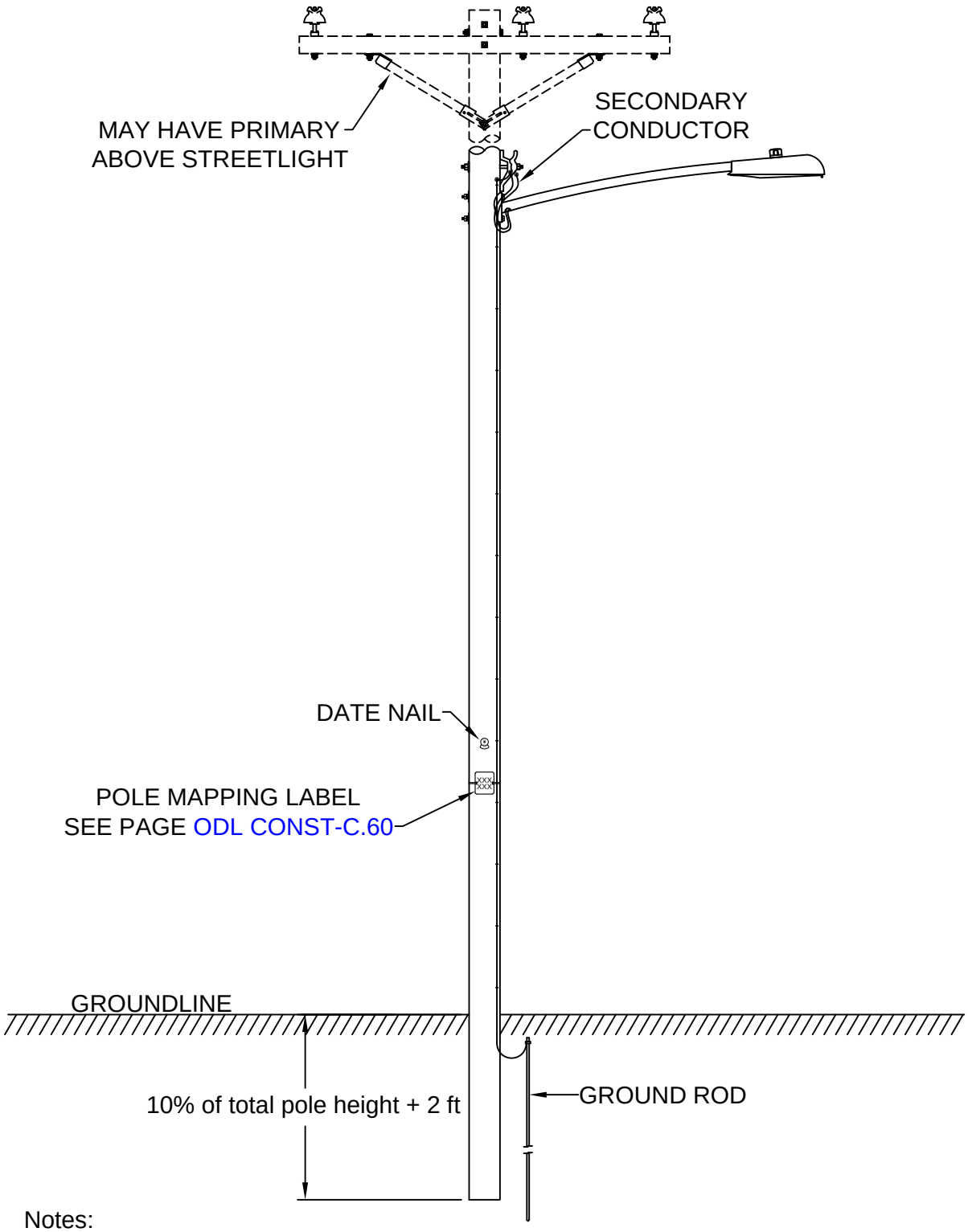

Notes:

1. Position mast arm perpendicular to street.
2. NESC requirement of four grounds per mile must be adhered to. A ground is required at all LED luminaire installations.

WOOD POLE - UNDERGROUND FED NIGHTWATCH LUMINAIRE

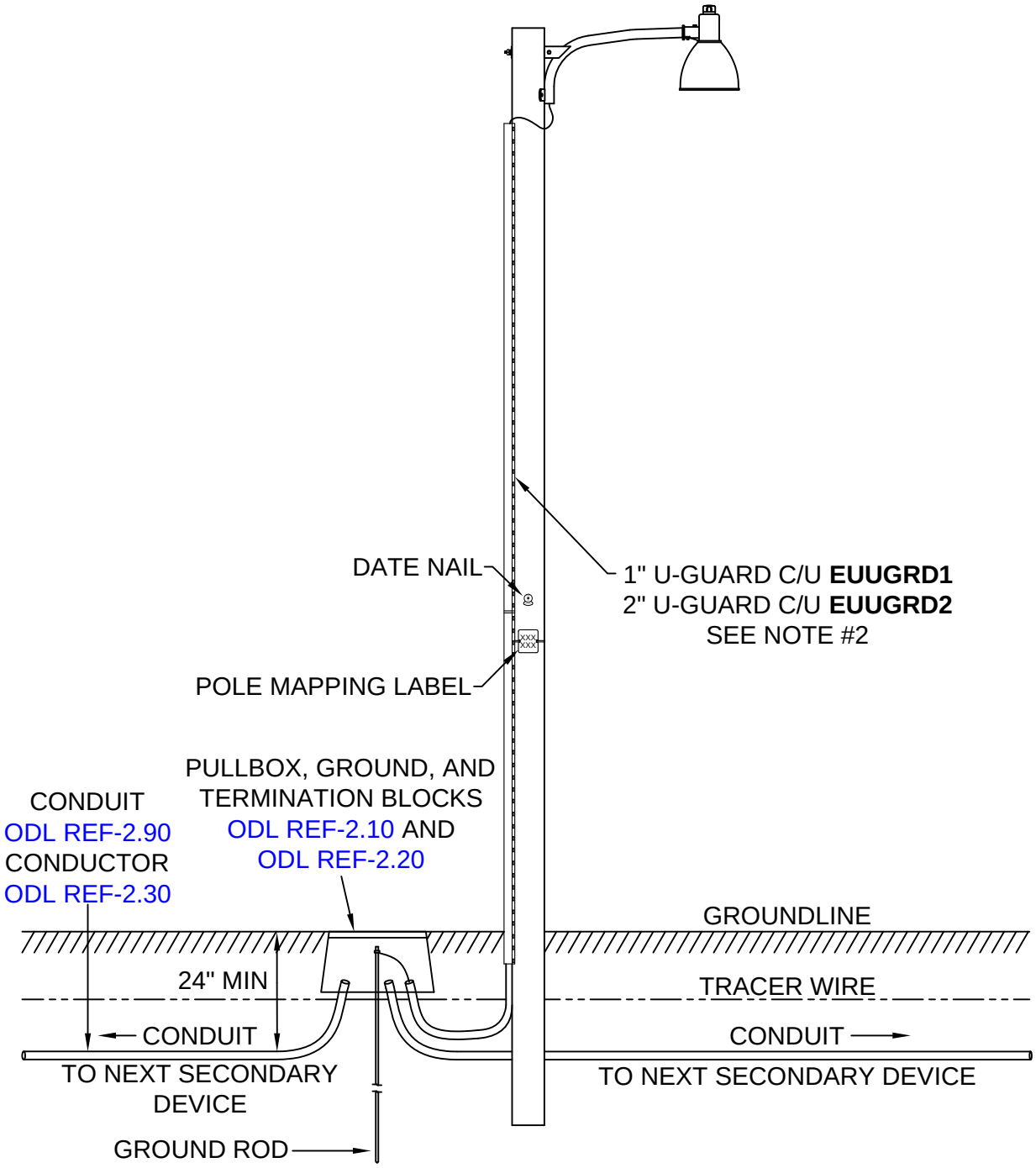

Notes:
1. Position mast arm perpendicular to street.
2. See page L-A in the Underground Manual for additional U-guard.

WOOD POLE - OVERHEAD FED NIGHTWATCH LUMINAIRE

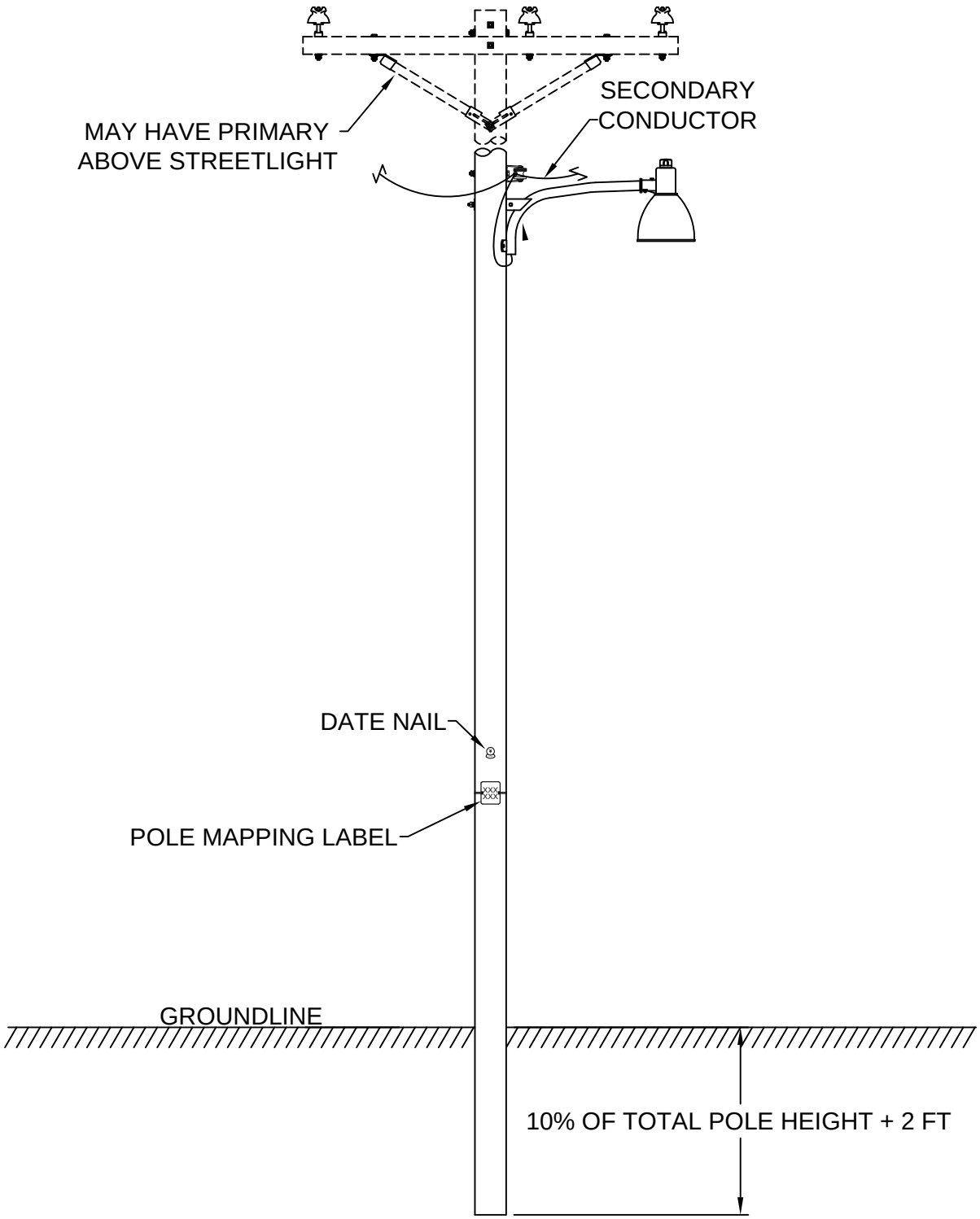

Notes:

1. Position mast arm perpendicular to street.

WOOD POLE
COBRAHEAD AND NIGHTWATCH LUMINAIRES

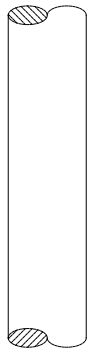

Wood Pole			
Description:	**C/U**	**Pole Cat ID**	**Color**
30 ft Poles			
Wood 30 ft class 5	**EOPY305**	106653	Natural
Wood 30 ft class 6	**EOPY306**	75178	Natural
35 ft Poles			
Wood 35 ft class 5	**EOPY355**	106663	Natural
40 ft Poles			
Wood 40 ft class 4	**EOPY404**	106672	Natural

Notes:
1. Design wood pole if needed. (See Overhead Manual Section A-POLES.)
2. For existing poles, check clearances from existing secondary and primary conductor as well as from telecommunication attachments.
3. NESC requirement of a minimum of 4 grounds per circuit mile must still be satisfied in design. See the ODL REF-INDEX and ODL REF-CONST sections for more information on grounding streetlight circuits.

HIGH MAST POLE

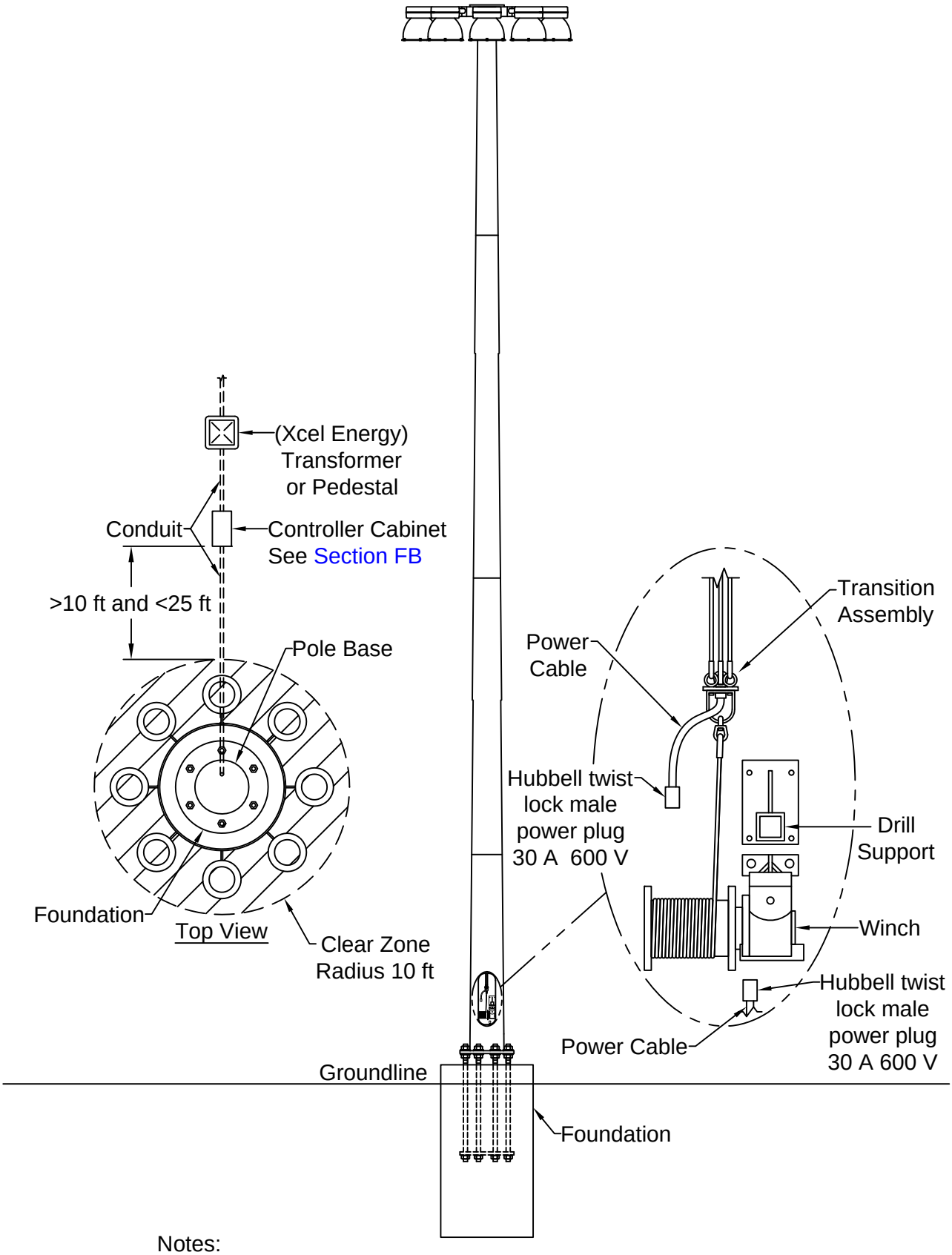

Notes:

1. High mast luminaire lowering device must be bottom latch type.

MID MAST POLE

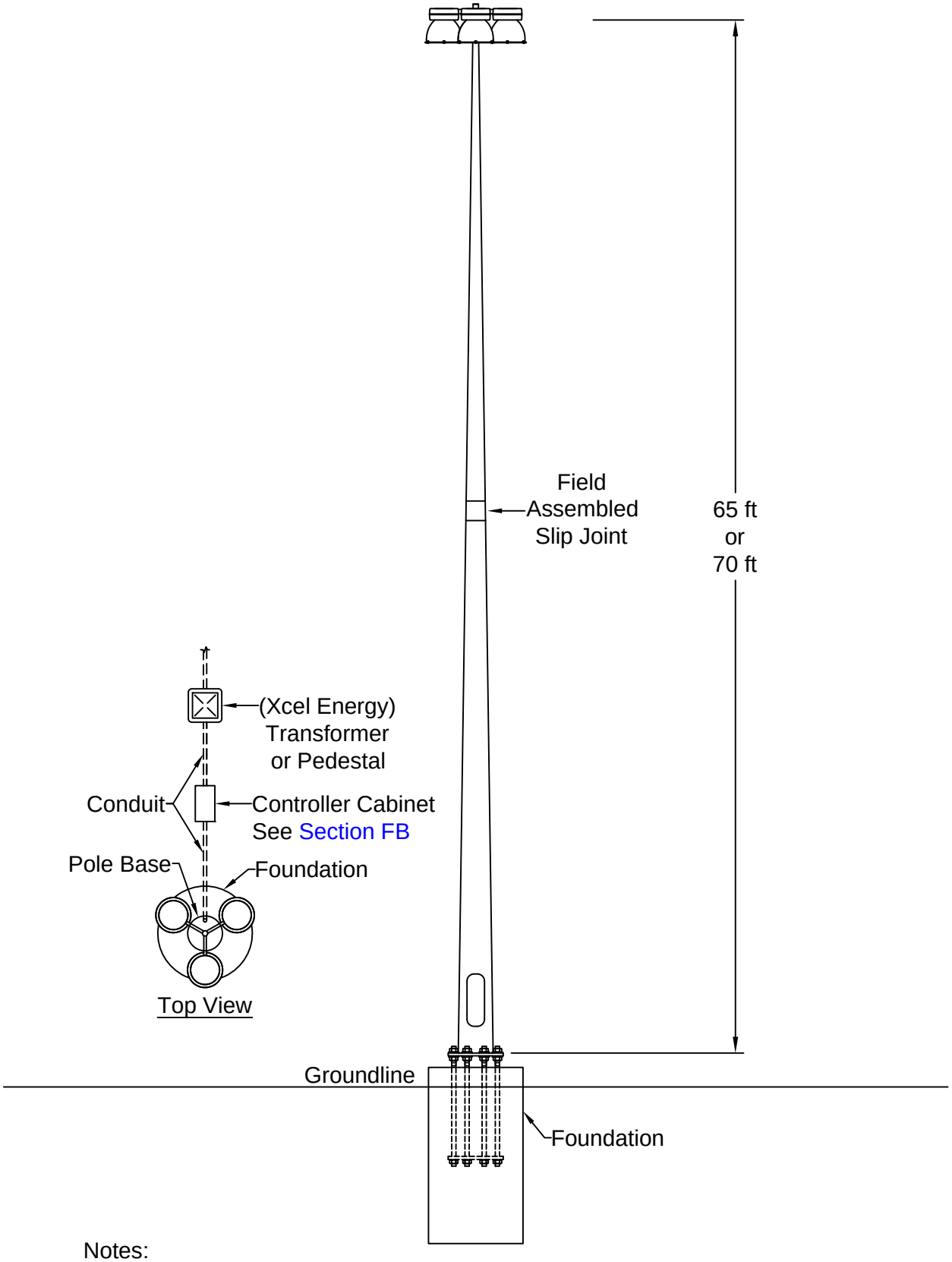

Notes:

1. Mid mast poles are designed for a maximum of three Mid Mast Luminaires or a maximum of four Curvilinear Luminaires.

STEEL TRAFFIC SIGNAL POLES
STREETLIGHT AND TRAFFIC CIRCUIT LAYOUT

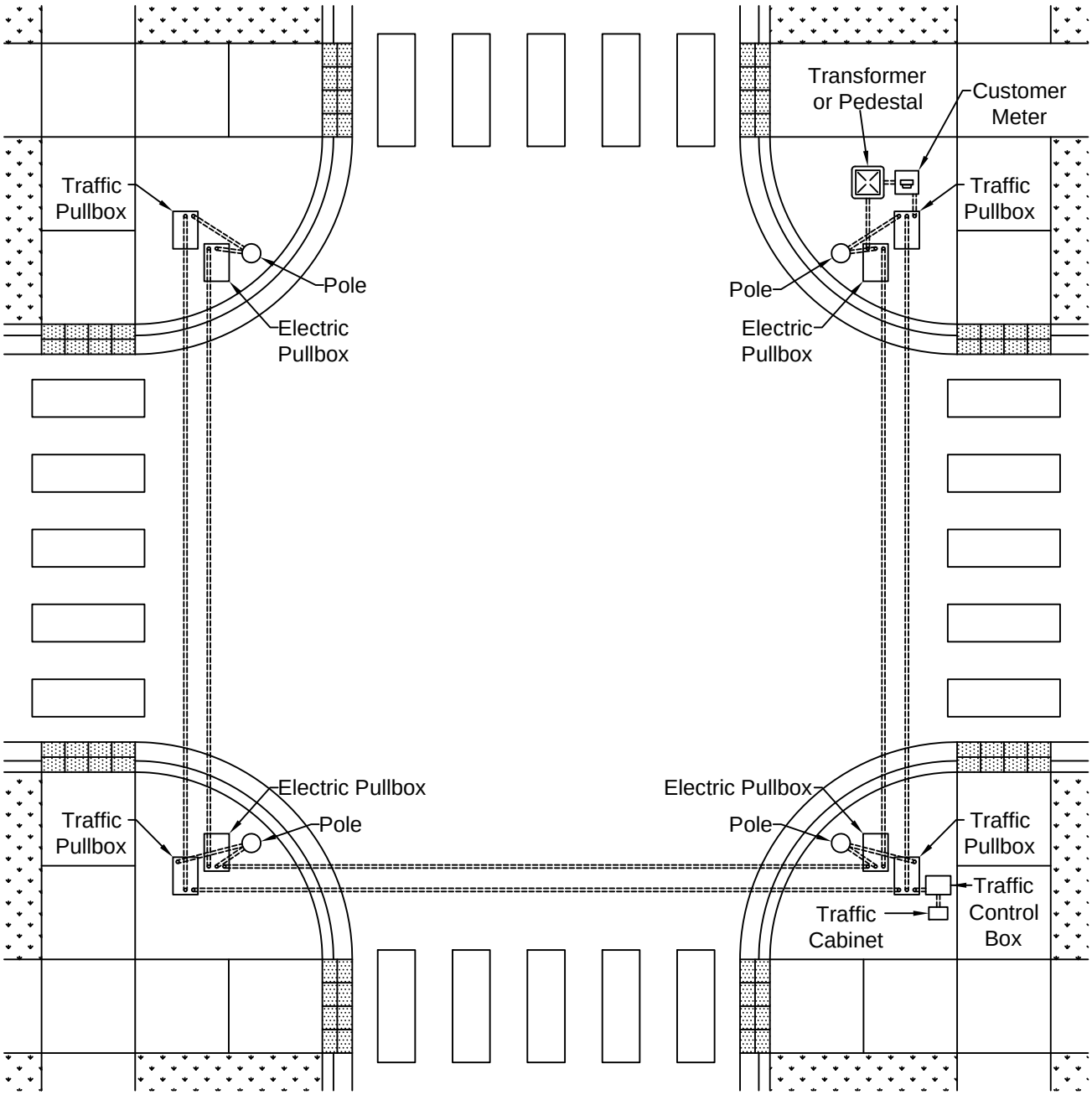

Notes:

1. This is for illustration purposes only. The customer side can vary.
2. The Xcel Energy conduit and electrical circuit must be separate from the Customer Meter conduit and electrical circuit for maintenance and tariff requirements.

Xcel Energy	Issued	Replaces	Drawn by	Approved	File	OUTDOOR LIGHTING MANUAL
	Jan-16	New	JD	GWB	PL-15.00	PAGE PL-15.00

STEEL TRAFFIC SIGNAL POLES

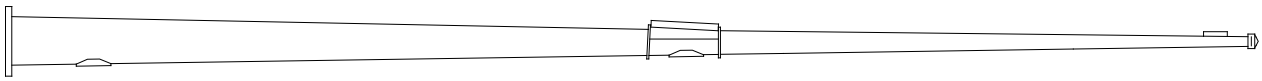

Galvanized Painted Steel			
Description: Traffic Signal Pole			
Traffic Signal Pole, 35 ft tall, 12.5” BC No Traffic Signal Arm	**ESTSP35ANF**	215647	Federal Green
Traffic Signal Pole, 35 ft tall, 22” BC Compatible with 20 ft to 40 ft Traffic Signal Arm	**ESTSP35AD2040F**	215651	Federal Green
Traffic Signal Pole, 35 ft tall, 22” BC Compatible with 45 ft to 55 ft Traffic Signal Arm	**ESTSP35AS4555F**	215649	Federal Green
Traffic Signal Pole, 35 ft tall, 25” BC Compatible with 60 ft to 70 ft Traffic Signal Arm	**ESTSP35AS6070F**	215650	Federal Green

Notes:

1. The material in these C/Us are all AASHTO 2009 compliant. These Traffic poles are not compatible with Traffic Signal installations that are built to AASHTO criteria prior to 2001.
2. The C/U only includes the necessary mounting hardware for the pole. The C/U does not include the conductor (see page ODL REF-2.30), the luminaire (see page LM-INDEX), or the fusing (see page ODL REF-2.50). Please add the appropriate material to the Traffic Signal installation.
3. Each Traffic Signal installation should consist of (1) Traffic Signal Pole, (1) Luminaire Arm, and (0), (1) or (2) Traffic Signal Arm(s), as needed.

ELECTRIC DISTRIBUTION DESIGN AND CONSTRUCTION STANDARDS

OUTDOOR LIGHTING

ARMS

ARMS
INDEX

TITLE	DRAWING PAGE	DESIGN PAGE
Information Page - Design Page Instructions		AM-INFO1
Steel Arms		
Tenon Mast Arm - Single - Side Mount Luminaires		AM-1.00
Tenon Mast Arm - Single - Side Mount Luminaires		AM-1.10
Tenon Mast Arm - Double - Side Mount Luminaires		AM-2.00
Tenon Mast Arm - Double - Side Mount Luminaires		AM-2.10
Tenon Spoke Arm - Single - Side Mount Luminaires		AM-3.00
Tenon Spoke Arm - Double - Side Mount Luminaires		AM-4.00
Tenon Spoke Arms - Mid Mast only		AM-5.00
Three Bolt Steel Traffic Arms - Side Mount Luminaires		AM-6.00
Two Bolt Upsweep Steel Arms - Evans Luminaire		AM-7.00
Mast Arm - Wood Pole		AM-8.00
Aluminum Arms		
Mast Arm - Surface Mount - SM Luminaires		AM-9.00
Arm - Shepherd hook - Domus Luminaires		AM-10.00
Arm - Shepherd hook - Double - Domus Luminaires		AM-11.00
Adaptor Arm - Double - Post Top Luminaires		AM-12.00
Mast Arm - Wood Pole		AM-13.00

DESIGN PAGE INSTRUCTIONS
ARMS

Standard Outdoor Lighting Material
The design pages contain all the standard Outdoor Lighting Material. In this section are the standard streetlight arms that Xcel Energy will use. Design standard material for new installations and for where the standard material is an appropriate match for legacy lighting. Items that have been installed in the past for some communities may no longer be Xcel Energy standard offerings. In some cases streetlight material has been used which will not match any of the current standard material. Legacy Cat IDs are still active and maintenance material can be ordered for these legacy installations.

Layout of Section
The Arms section contains design pages for the standard streetlight arms arranged primarily by material type. There are two major types of material for the streetlight arms; steel and aluminum. Each group may contain several aesthetically different style arms. The design and drawing pages showing the pertinent C/Us, Cat IDs and illustrations of the various arm styles can be found on the index page AM-INDEX.

Standard Arms are primarily manufactured to slip fit on 3” OD pipe tenons. NSPM has a handful of aluminum surface mount arms that are directly bolted to the fiberglass poles and aluminum poles. There are also unique standard aluminum arms for wood pole applications. All standard arms have a 2-3/8” OD pipe end designed to allow the standard luminaires to slip fit onto the arms. Standard mast arms are available in various colors depending on their type and the jurisdiction.

All standard arms have been specifically designed to accommodate standard luminaires and to mechanically fit on standard poles.

C/U Components
The C/Us contain the arm Cat ID, and also contain the associated material that goes with it, such as the cable.

TENON STEEL MAST ARM - SINGLE SIDE MOUNT LUMINAIRES

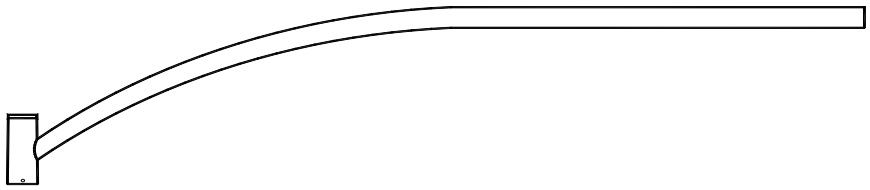

Painted Steel or Galvanized - Tenon			
Description:	**C/U**	**Mast Arm Cat ID**	**Color**
Black RAL9017			
Mast Arm - 4 ft - Tenon	**ESAS4FTK**	213384	Black
Mast Arm - 6 ft - Tenon	**ESAS6FTK**	213383	Black
Mast Arm - 8 ft - Tenon	**ESAS8FTK**	213382	Black
Mast Arm - 10 ft - Tenon	**ESAS10FTK**	213381	Black
Federal Green RAL6012			
Mast Arm - 4 ft - Tenon	**ESAS4FTF**	213377	Federal Green
Mast Arm - 6 ft - Tenon	**ESAS6FTF**	213378	Federal Green
Mast Arm - 8 ft - Tenon	**ESAS8FTF**	213379	Federal Green
Mast Arm - 10 ft - Tenon	**ESAS10FTF**	213380	Federal Green
Galvanized			
Mast Arm - 4 ft - Tenon	**ESAS4FTV**	213373	Galvanized
Mast Arm - 6 ft - Tenon	**ESAS6FTV**	213375	Galvanized
Mast Arm - 8 ft - Tenon	**ESAS8FTV**	213376	Galvanized
Mast Arm - 10 ft - Tenon	**ESAS10FTV**	213369	Galvanized
Light Grey RAL7047			
Mast Arm - 4 ft - Tenon	**ESAS4FTL**	213392	Light Grey
Mast Arm - 6 ft - Tenon	**ESAS6FTL**	213391	Light Grey
Mast Arm - 8 ft - Tenon	**ESAS8FTL**	213390	Light Grey
Mast Arm - 10 ft - Tenon	**ESAS10FTL**	213389	Light Grey

Continued on next page….

TENON STEEL MAST ARM - SINGLE SIDE MOUNT LUMINAIRES

Description:	C/U	Mast Arm Cat ID	Color
Dark Grey RAL7039			
Mast Arm - 4 ft - Tenon	**ESAS4FTD**	213385	Dark Grey
Mast Arm - 6 ft - Tenon	**ESAS6FTD**	213386	Dark Grey
Mast Arm - 8 ft - Tenon	**ESAS8FTD**	213387	Dark Grey
Mast Arm - 10 ft - Tenon	**ESAS10FTD**	213388	Dark Grey

Notes:
1. Mast arms fit on a 3” OD Tenon Top pole directly with no other parts needed.
2. Mast arm has 2-3/8” OD pipe end that slip fits all standard Side Mount luminaires.

TENON STEEL MAST ARM - DOUBLE SIDE MOUNT LUMINAIRES

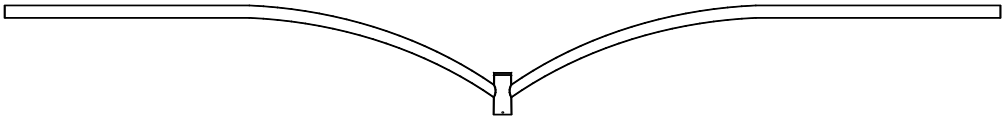

Painted Steel or Galvanized - Tenon Top Fitting			
Description:	**C/U**	**Mast Arm Cat ID**	**Color**
Black RAL9017			
Mast Arm - 4 ft - Tenon	**ESAS4FDK**	213409	Black
Mast Arm - 6 ft - Tenon	**ESAS6FDK**	213410	Black
Mast Arm - 8 ft - Tenon	**ESAS8FDK**	213411	Black
Mast Arm - 10 ft - Tenon	**ESAS10FDK**	213412	Black
Federal Green RAL6012			
Mast Arm - 4 ft - Tenon	**ESAS4FDF**	213416	Federal Green
Mast Arm - 6 ft - Tenon	**ESAS6FDF**	213415	Federal Green
Mast Arm - 8 ft - Tenon	**ESAS8FDF**	213414	Federal Green
Mast Arm - 10 ft - Tenon	**ESAS10FDF**	213413	Federal Green
Galvanized			
Mast Arm - 4 ft - Tenon	**ESAS4FDV**	213417	Galvanized
Mast Arm - 6 ft - Tenon	**ESAS6FDV**	213418	Galvanized
Mast Arm - 8 ft - Tenon	**ESAS8FDV**	213419	Galvanized
Mast Arm - 10 ft - Tenon	**ESAS10FDV**	213420	Galvanized
Light Grey RAL7047			
Mast Arm - 4 ft - Tenon	**ESAS4FDL**	213401	Light Grey
Mast Arm - 6 ft - Tenon	**ESAS6FDL**	213402	Light Grey
Mast Arm - 8 ft - Tenon	**ESAS8FDL**	213403	Light Grey
Mast Arm - 10 ft - Tenon	**ESAS10FDL**	213404	Light Grey

Continued on next page….

TENON STEEL MAST ARM - DOUBLE SIDE MOUNT LUMINAIRES

Description:	C/U	Mast Arm Cat ID	Color
Dark Grey RAL7039			
Mast Arm - 4 ft - Tenon	**ESAS4FDD**	213408	Dark Grey
Mast Arm - 6 ft - Tenon	**ESAS6FDD**	213407	Dark Grey
Mast Arm - 8 ft - Tenon	**ESAS8FDD**	213406	Dark Grey
Mast Arm - 10 ft - Tenon	**ESAS10FDD**	213405	Dark Grey

Notes:
1. Mast arms fit on a 3” OD Tenon Top pole directly with no other parts needed.
2. Mast arm has 2-3/8” OD pipe end to slip fit luminaires.

TENON STEEL SPOKE ARM - SINGLE SIDE MOUNT LUMINAIRES

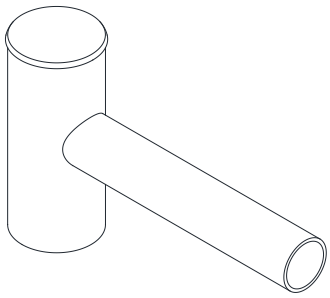

Painted Steel or Galvanized - Tenon Top Fitting			
Description:	**C/U**	**Spoke Arm Cat ID**	**Color**
Black RAL9017			
Spoke Arm - 1 ft - Tenon	**ESAS1FSK**	214167	Black
Spoke Arm - 6 ft - Tenon	**ESAS6FSK**	214341	Black
Federal Green RAL6012			
Spoke Arm - 1 ft - Tenon	**ESAS1FSF**	214168	Federal Green
Spoke Arm - 6 ft - Tenon	**ESAS6FSF**	215911	Federal Green
Galvanized			
Spoke Arm - 1 ft - Tenon	**ESAS1FSV**	214166	Galvanized
Light Grey RAL7047			
Spoke Arm - 1 ft - Tenon	**ESAS1FSL**	214170	Light Grey
Dark Grey RAL7039			
Spoke Arm - 1 ft - Tenon	**ESAS1FSD**	214171	Dark Grey

Notes:
1. Spoke arms fit on a 3” OD Tenon Top pole directly with no other parts needed.
2. Spoke arm has 2-3/8” OD pipe end that slip fits all standard Side Mount luminaires.

TENON STEEL SPOKE ARM - DOUBLE SIDE MOUNT LUMINAIRES

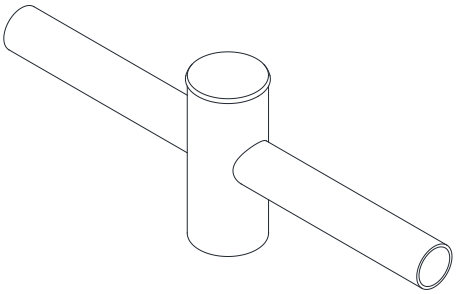

Painted Steel - Tenon Top Fitting			
Description:	**C/U**	**Spoke Arm Cat ID**	**Color**
Black RAL9017			
Spoke Arm - 1 ft - Tenon	**ESAS1FDK**	215120	Black
Federal Green RAL6012			
Spoke Arm - 1 ft - Tenon	**ESAS1FDF**	214279	Federal Green
Galvanized			
Spoke Arm - 1 ft - Tenon	**ESAS1FDV**	216151	Galvanized

Notes:
1. Spoke arms fit on a 3” OD Tenon Top pole directly with no other parts needed.
2. Spoke arm has 2-3/8” OD pipe end that slip fits all standard Side Mount luminaires

TENON STEEL SPOKE ARMS
MID MAST POLES ONLY

Triple Spoke Arm			
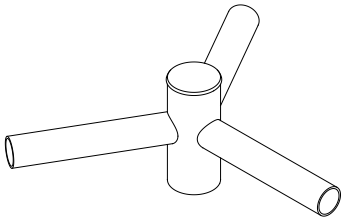			
Triple Spoke Arm - Tenon	**ESAS1FTV**	216817	Galvanized
Quadruple Spoke Arm			
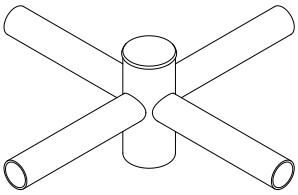			
Quadruple Spoke Arm - Tenon	**ESAS1FQV**	216818	Galvanized

Notes:
1. Spoke Arm fit on a 3” OD tenon directly with no other parts needed.
2. Spoke Arm has 2-3/8” OD pipe end that slip fits all standard Side Mount luminaires.
3. These arms are approved for use on Mid Mast poles only.

THREE BOLT STEEL TRAFFIC ARMS
SIDE MOUNT LUMINAIRES

Galvanized Painted Steel			
Description: Luminaire Arm (Painted Steel)			
Luminaire Arm, Straight, 10 ft -Three Bolt	**ESAR10SFGRD1**	54113	Federal Green

Notes:

1. The material in these C/Us are all AASHTO 2009 compliant. These Traffic Poles and Traffic Arms are not compatible with Traffic Signal installations that are built to AASHTO criteria prior to 2001.
2. The C/U only includes the necessary mounting hardware for the pole or arm. The C/U does not include the conductor (see page ODL REF-2.30), the luminaire, or the fusing (see page ODL REF-2.50). Please add the appropriate material to the Traffic Signal installation.
3. Each Traffic Signal installation should consist of (1) Traffic Signal Pole, (1) Luminaire Arm, and (0), (1) or (2) Traffic Signal Arm(s), as needed.

TWO BOLT UPSWEEP STEEL ARM
EVANS PENDANT LUMINAIRE

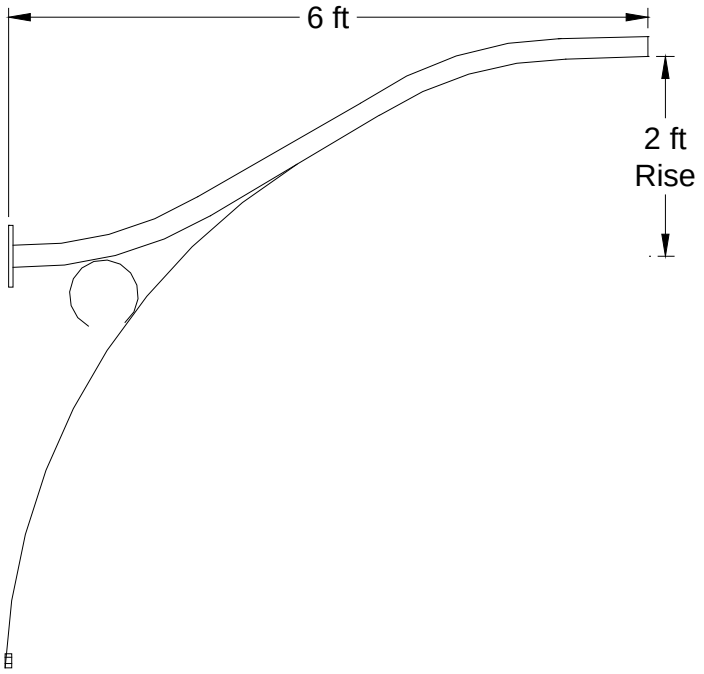

Painted Steel - Two Bolt Mount			
Description:	**C/U**	**Arm Cat ID**	**Color**
Black RAL9017			
Upsweep Single Steel Mast arm - 2-3/8” OD	**ESAS6PEK**	216705	Black
Upsweep Double Steel Mast arm - 2-3/8” OD	**ESAD6PEK**	216705	Black
Federal Green RAL6012			
Upsweep Single Steel Mast arm - 2-3/8” OD	**ESAS6PEF**	220771	Federal Green
Upsweep Double Steel Mast arm - 2-3/8” OD	**ESAD6PEF**	220771	Federal Green
Dark Green RAL6005[3]			
Upsweep Single Steel Mast arm - 2-3/8” OD	**ESAS6PEG**	216707	Dark Green
Upsweep Double Steel Mast arm - 2-3/8” OD	**ESAD6PEG**	216707	Dark Green
Dark Bronze (Brown) RAL8019			
Upsweep Single Steel Mast arm - 2-3/8” OD	**ESAS6PEZ**	216706	Dark Bronze (Brown)
Upsweep Double Steel Mast arm - 2-3/8” OD	**ESAD6PEZ**	216706	Dark Bronze (Brown)

Notes:
1. Evans arm bolts on the Evans two bolt steel pole using two bolts.
2. Evans arm includes a scroll that is attached to the pole using a 5/16” self-tapping bolt.
3. Dark Green Arms are to only be designed for NSPM.

STEEL MAST ARM
WOOD POLE

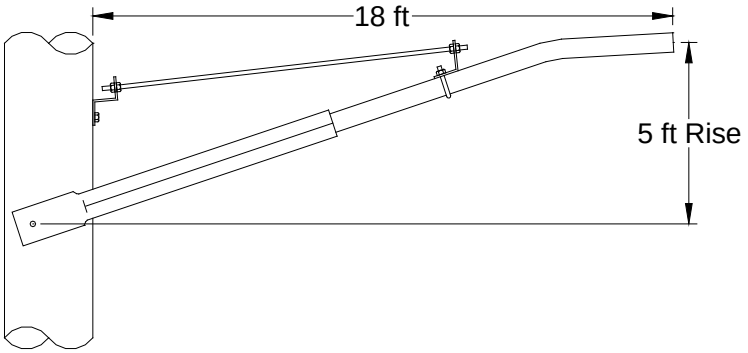

Steel - Wood Pole Mounted			
Description:	**C/U**	**Mast Arm Cat ID**	**Color**
Mast Arm - 18 ft	**ESLUMA18UR**	106485	Galvanized

Notes:
1. Mast arms have provisions with for mounting on wood poles with two 5/8 inch machine bolts and a support bracket.
2. Mast arm has 1-2/3” OD pipe end to slip fit luminaires.

ALUMINUM MAST ARM SURFACE MOUNT - SINGLE SIDE MOUNT LUMINAIRES
NSPM ONLY

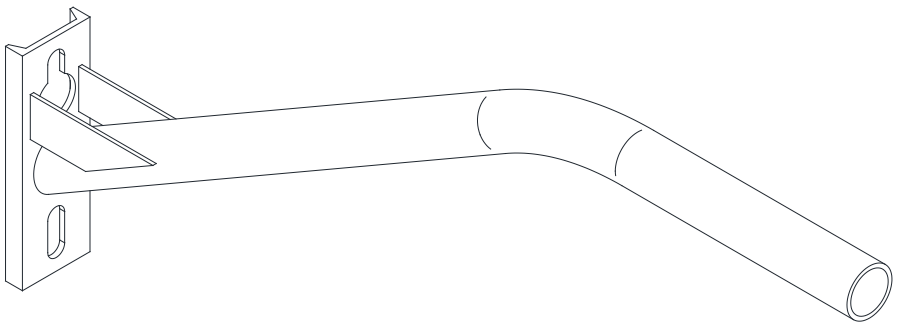

Aluminum - Surface Mount			
Description:	**C/U**	**Mast Arm Cat ID**	**Color**
Black RAL9017			
Mast Arm - 4 ft - Surface Mount	**ESAA4FMK**	216421	Black
Dark Green RAL6005			
Mast Arm - 4 ft - Surface Mount	**ESAA4FMG**	209018	Dark Green
Dark Bronze RAL8019			
Mast Arm - 4 ft - Surface Mount	**ESAA4FMZ**	106481	Dark Bronze (Brown)
Aluminum			
Mast Arm - 2-1/2 ft - Surface Mount	**ESAA2FM**	106472	Aluminum
Mast Arm - 4 ft - Surface Mount	**ESAA4FM**	106480	Aluminum
Mast Arm - 6 ft - Surface Mount	**ESAA6FM**	106471	Aluminum
Mast Arm - 8 ft - Surface Mount	**ESAA8FM**	106473	Aluminum
Mast Arm - 10 ft - Surface Mount	**ESAA10FM**	106479	Aluminum

Notes:
1. Aluminum mast arms are for surface mounting on Aluminum or Fiberglass Poles using machine bolts.
2. Aluminum mast arm has 2-3/8” OD pipe end that slip fits all standard Side Mount luminaires

ALUMINUM ARM - SHEPHERD HOOK
DOMUS PENDANT LUMINAIRE

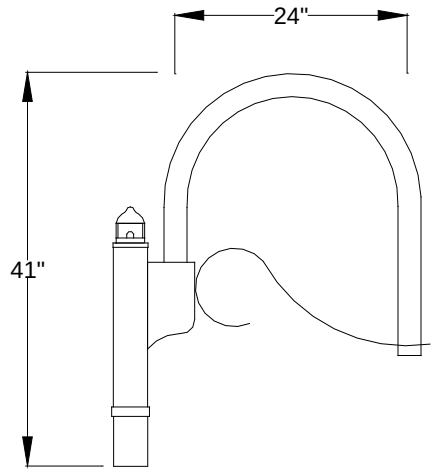

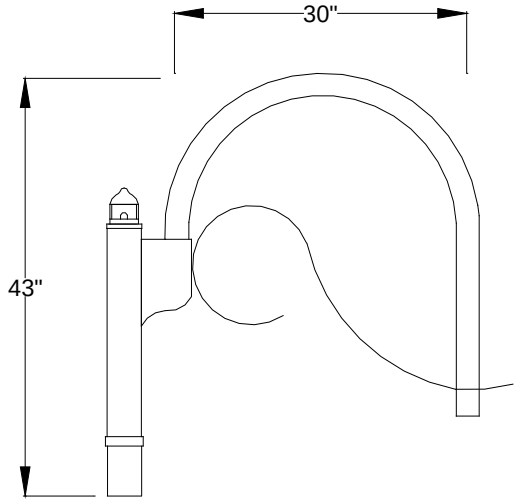

Painted Aluminum - Tenon Top Fitting			
Description:	**C/U**	**Arm Cat ID**	**Color**
Black RAL9017			
Shepherd Hook - 3” OD Tenon Top - Luminaire screw fit dual adapter - fits 3/4” and 1-1/4” thread - small version for 24 ft high and shorter poles	**ESAA24SK**	213478	Black
Shepherd Hook - 3” OD Tenon Top - Luminaire screw fit dual adapter - fits 3/4” and 1-1/4” thread - large version for 30 ft high poles	**ESAA30SK**	214343	Black

Notes:
1. Shepherd hook sits on a 3” OD Tenon Top pole directly with no other parts needed.
2. Shepherd hook has a threaded adaptor that will accommodate either 3/4” or 1-1/4” thread. The luminaire will fit with a jam nut to secure it to the threaded area.

ALUMINUM ARM - SHEPHERD HOOK - DOUBLE DOMUS PENDANT LUMINAIRE

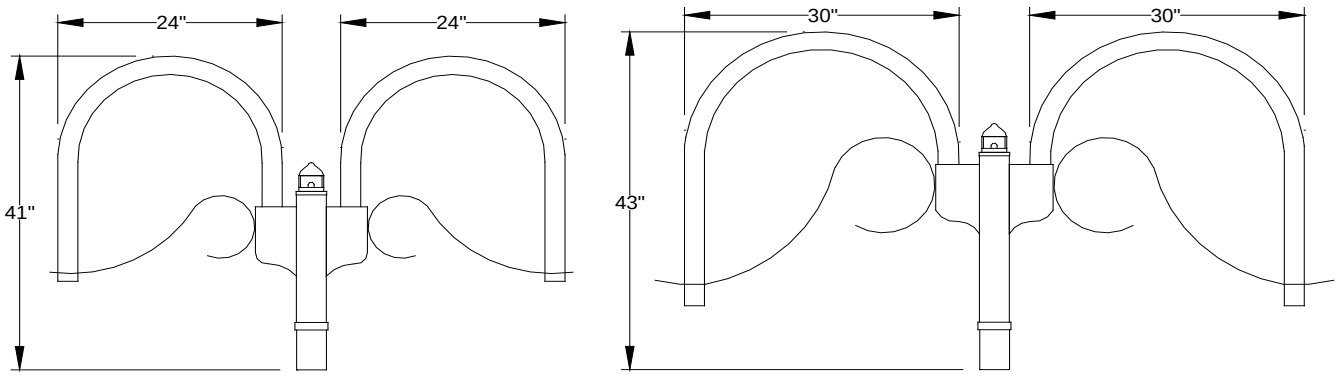

Painted Aluminum - Tenon Top Fitting			
Description:	**C/U**	**Arm Cat ID**	**Color**
Black RAL9017			
Shepherd Hook - 3” OD Tenon Top - Luminaire screw fit dual adapter - fits 3/4” and 1-1/4” thread - small version for 24 ft high and shorter poles	**ESAA24DK**	220703	Black
Shepherd Hook - 3” OD Tenon Top - Luminaire screw fit dual adapter - fits 3/4” and 1-1/4” thread - large version for 30 ft high poles	**ESAA30DK**	220706	Black

Notes:
1. Shepherd hook sits on a 3” OD Tenon Top pole directly with no other parts needed.
2. Shepherd hook has a threaded adaptor that will accommodate either 3/4” or 1-1/4” thread. The luminaire will fit with a jam nut to secure it to the threaded area.

ALUMINUM ADAPTOR ARM - DOUBLE POST TOP LUMINAIRES

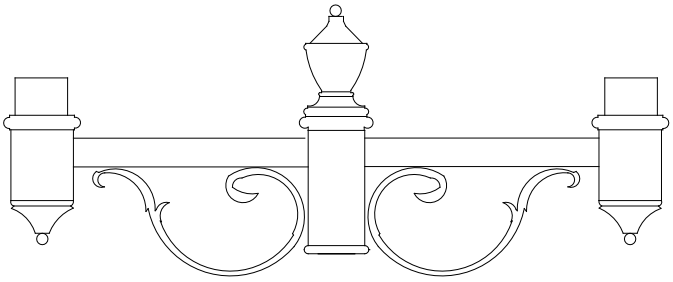

Painted Aluminum - Tenon Top Fitting			
Description: For use on 3” OD pole top tenon	**C/U**	**Post Top Adaptor Cat ID**	**Color**
Double Post Top Adaptor Arm - 30”	**ESAA30GK**	54478	Black
Double Post Top Adaptor Arm - 30”	**ESAA30GZ**	180115	Dark Bronze
Double Post Top Adaptor Arm - 30”	**ESAA30GDG**	180116	Dark Green

Notes:
1. Adaptor arms are to only be used with steel poles.
2. Adaptor arms have only been approved for use on Vernon and Acorn luminaires.

ALUMINUM MAST ARM
WOOD POLE

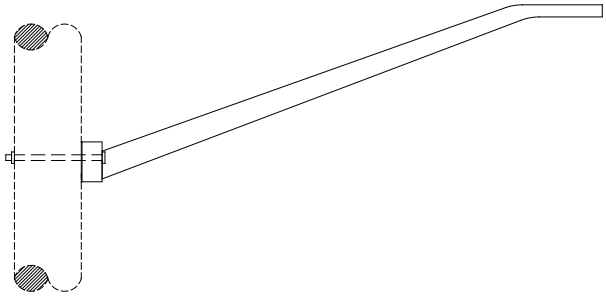

Aluminum - Wood Pole Mounted			
Description:	**C/U**	**Arm Cat ID**	**Color**
Mast Arm - 2-1/2 ft	**ESAA2FW**	218541	Aluminum
Mast Arm - 4 ft	**ESAA4FW**	106480	Aluminum
Mast Arm - 6 ft	**ESAA6FW**	54206	Aluminum
Mast Arm - 10 ft	**ESAA10FW**	54207	Aluminum

Notes:
1. Mast arms have provisions with for mounting on wood poles with one or two 5/8 inch machine bolts and two ½ inch lag screws.
2. Mast arm has 2-3/8” OD pipe end to slip fit luminaires.

ELECTRIC DISTRIBUTION DESIGN AND CONSTRUCTION STANDARDS

OUTDOOR LIGHTING FOUNDATIONS AND BASES

FOUNDATIONS
INDEX

TITLE	DRAWING PAGE	DESIGN PAGE
Information Page - Design Page Instructions		FB-INFO1
Pullbox, Conduit, Term Block, Handhole Fuse		
Incidental Traffic Rated	FB-1.00	FB-1.10
Traffic Rated	FB-1.00	FB-2.10
Pullbox in Wall Application	FB-2.20	
Foundation		
Precast Concrete		FB-3.00
Steel Helix		FB-4.00
Non-Breakaway Transformer Base (T-base)		FB-5.00
Breakaway Support		
Transformer Base (T-Base)		FB-5.10
Breakaway Bolts		FB-6.00
Breakaway Bolts - Safety Base		FB-7.00
Decorative Base		
Washington		FB-8.00
Madison		FB-9.00
High Mast Controller Cabinet		
100 A	FB-12.00	
200 A	FB-12.20	

DESIGN PAGE INSTRUCTIONS
FOUNDATIONS

Standard Outdoor Lighting Material
The design pages contain all the standard Outdoor Lighting Material. In this section are the standard streetlight foundations, bases and pullboxes that Xcel Energy will use. Design standard material for new installations and for where the standard material is an appropriate match for legacy lighting. Items that have been installed in the past for some communities may no longer be Xcel Energy standard offerings. In some cases streetlight material has been used which will not match any of the current standard material. Legacy Cat IDs are still active and maintenance material can be ordered for these legacy installations.

Layout of Section
The Foundations Section contains design pages for the standard streetlight foundations, pullboxes and decorative bases. The various design and drawing pages, showing the pertinent C/Us, Cat IDs and illustrations of the materials, can be found on the index page FB-INDEX.

Xcel Energy has standardized on two types of foundations; precast concrete foundations and steel helix screw in foundations. Both types can be used with all standard foundation mounted poles except for overhead fed steel poles. Overhead fed poles require specially designed pour in place concrete foundation approved by a structural engineer at the concrete company. Please contact Electric Distribution Standards for the loading criteria.

Pullboxes are required at all underground fed poles. There are two types of pullboxes that can be used. Traffic rated pullboxes have a steel lid and concrete and are approved for use in roadways and alleys. Incidental traffic rated pullboxes are approved for use in the sidewalk and in the right of way. For those applications where a pullbox cannot be installed, transformer base (T-base) can be used for the necessary terminations.

Decorative bases are only for aesthetic purposes and are only approved for specific poles. The decorative bases should only be called for with the consent of the customer.

C/U Components
The C/Us contain the foundation, decorative base, or pullbox Cat ID, and also contain the associated material such as the hardware.

FOUNDATIONS
PULLBOX, CONDUIT, TERM BLOCK, HANDHOLE FUSE

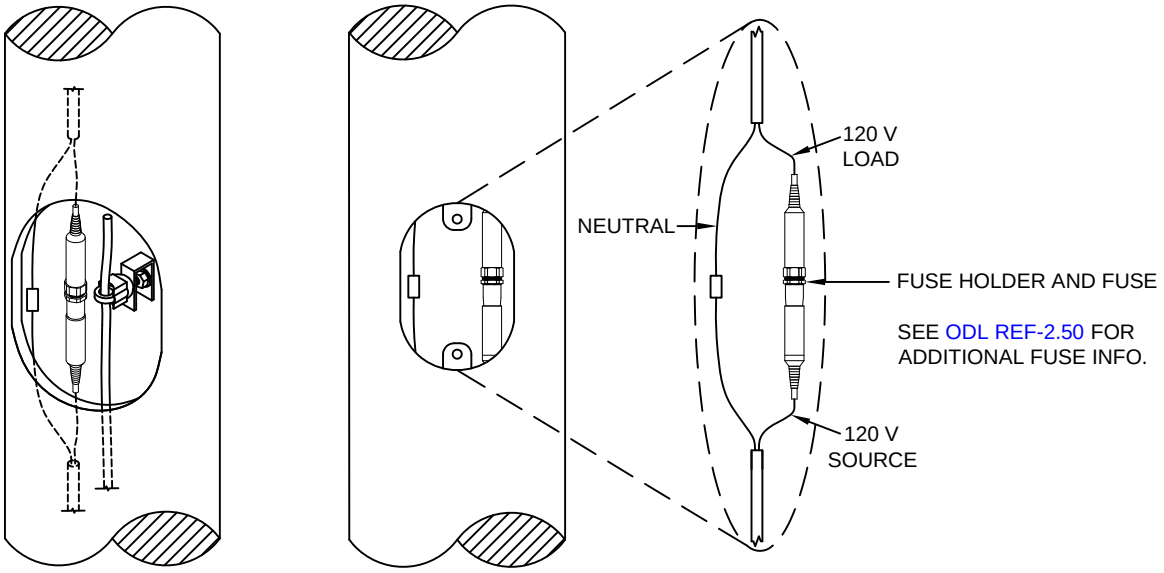

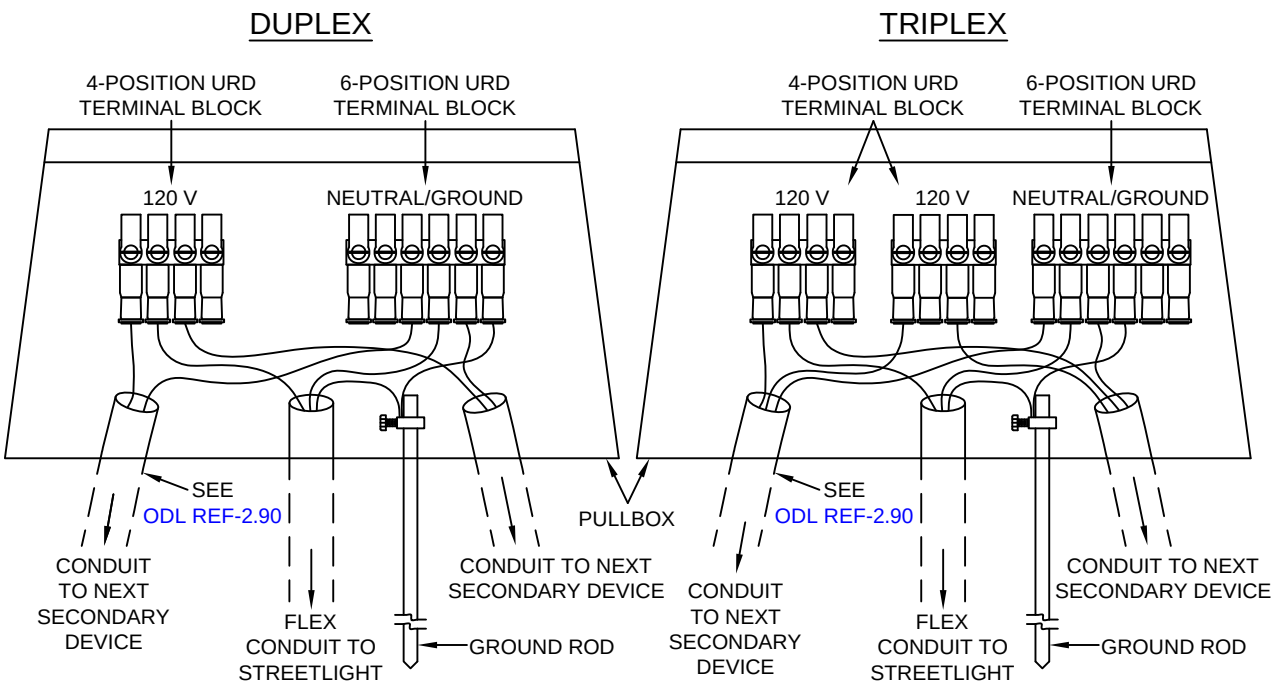

Notes:

1. While pole grounding is not required for fiberglass poles, the NESC requirement of a minimum of 4 grounds per mile must still be satisfied in design. In addition, all circuits with LED fixtures must be grounded at the pole.
2. For standard cable in streetlight applications, see ODL REF-2.30.
3. For conduit in streetlight application, see ODL REF-2.90.
4. Streetlights with dual luminaires should have each luminaire fused separately in the handhole.

C/U GROUP PAGE
PULLBOX, CONDUIT, TERM BLOCK, HANDHOLE FUSE
INCIDENTAL TRAFFIC RATED

Pullbox	**Incidental Traffic Rated (ANSI) Small Pullbox (1/0 & Smaller)**		**Incidental Traffic Rated (ANSI) Large Pullbox (4/0 & Larger)**		**Qty**
Conductor Type	**Duplex**	**Triplex**	**Duplex**	**Triplex**	
C/U Group	**ESEP1/0DIT**	**ESEP1/0TIT**	**ESEP4/0DIT**	**ESEP4/0TIT**	
Description:					
Small Pullbox	ESEPTR811x18	ESEPTR811x18	-	-	1
Large Pullbox	-	-	ESEPTR813x24	ESEPTR813x24	1
Flex Conduit	ESCDCONDEXT2	ESCDCONDEXT2	ESCDCONDEXT2	ESCDCONDEXT2	10
Ground rod, conn, #4 Cu gnd wire	ESGRD	ESGRD	ESGRD	ESGRD	1
Terminal Block, 6-position	ESCN6TERM BLOCKA	ESCN6TERM BLOCKA	ESCN6TERM BLOCKA	ESCN6TERM BLOCKA	1
Terminal Block, 4-position	ESCN4TERM BLOCKA	ESCN4TERM BLOCKA	ESCN4TERM BLOCKA	ESCN4TERM BLOCKA	1
Terminal Block, 4-position	-	ESCN4TERM BLOCKA	-	ESCN4TERM BLOCKA	1
Pole Handhole Fuse Holder	ESFUSEHDR	ESFUSEHDR	ESFUSEHDR	ESFUSEHDR	1

Notes:
1. Please consult with your Outdoor Lighting department on the preferred foundation and breakaway support for your area.

SPECIFY:

DUAL LUMINAIRE INSTALLATION ADD:
Qty “1” C/U **ESFUSEHDR** handhole fuse and Qty “Height of Pole +10 ft” C/U **ESCA12/2IC** conductor

FOUNDATION: (Select one, if needed)
Metal Helix Qty “1” C/U **ESPMPABSLL**, see page ODL REF-4.15
Precast Concrete Qty “1” C/U **ESFD2448121N**, see page ODL REF-4.10

BREAKAWAY SUPPORT: (Select one kit from the list below, if needed)
Breakaway Bolts Qty “1” C/U **ESPMBKAWAY**, see page ODL REF-4.25
Safety Base Qty “1” C/U **ESPMBKAWAYS**, see page ODL REF-4.30
Transformer Base (T-base) Qty “1” C/U **ESBS12X12BRK**, see page ODL REF-4.20

C/U GROUP PAGE
PULLBOX, CONDUIT, TERM BLOCK, HANDHOLE FUSE
TRAFFIC RATED

Pullbox	**Traffic Rated (AASHTO) Small Pullbox (1/0 & Smaller)**		**Traffic Rated (AASHTO) Large Pullbox (4/0 & Larger)**		**Qty**
Conductor Type	**Duplex**	**Triplex**	**Duplex**	**Triplex**	
C/U Group	**ESEP1/0DTR**	**ESEP1/0TTR**	**ESEP4/0DTR**	**ESEP4/0TTR**	
Description:					
Small Pullbox	ESEPH2014x20	ESEPH2014x20	-	-	1
Large Pullbox	-	-	ESEPH2015x36	ESEPH2015x36	1
Flex Conduit	ESCDCONDEXT2	ESCDCONDEXT2	ESCDCONDEXT2	ESCDCONDEXT2	10
Ground rod, conn, #4 Cu gnd wire	ESGRD	ESGRD	ESGRD	ESGRD	1
Terminal Block, 6-position	ESCN6TERM BLOCKA	ESCN6TERM BLOCKA	ESCN6TERM BLOCKA	ESCN6TERM BLOCKA	1
Terminal Block, 4-position	ESCN4TERM BLOCKA	ESCN4TERM BLOCKA	ESCN4TERM BLOCKA	ESCN4TERM BLOCKA	1
Terminal Block, 4-position	-	ESCN4TERM BLOCKA	-	ESCN4TERM BLOCKA	1
Pole Handhole Fuse Holder	ESFUSEHDR	ESFUSEHDR	ESFUSEHDR	ESFUSEHDR	1

Notes:
1. Please consult with your Outdoor Lighting department on the preferred foundation and breakaway support for your area.

SPECIFY:

DUAL LUMINAIRE INSTALLATION ADD:
Qty “1” C/U **ESFUSEHDR** handhole fuse and Qty “Height of Pole +10 ft” C/U **ESCA12/2IC** conductor

FOUNDATION: (Select one, if needed)
Metal Helix Qty “1” C/U **ESPMPABSLL**, see page ODL REF-4.15
Precast Concrete Qty “1” C/U **ESFD2448121N**, see page ODL REF-4.10

BREAKAWAY SUPPORT: (Select one kit from the list below, if needed)
Breakaway Bolts Qty “1” C/U **ESPMBKAWAY**, see page ODL REF-4.25
Safety Base Qty “1” C/U **ESPMBKAWAYS**, see page ODL REF-4.30
Transformer Base (T-base) Qty “1” C/U **ESBS12X12BRK**, see page ODL REF-4.20

FOUNDATIONS
PULLBOX IN WALL APPLICATION

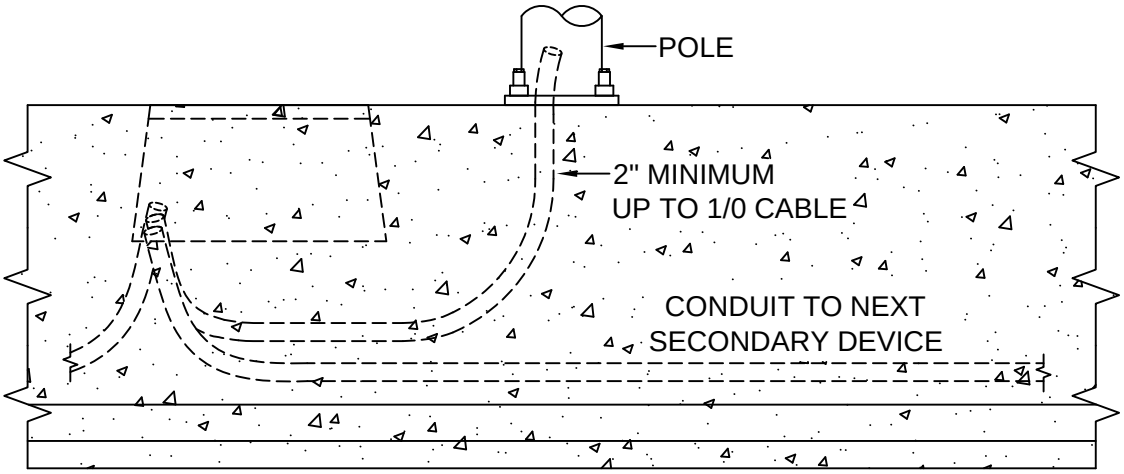

Installation of pullbox drain is recommended to remove water from pullbox interior.

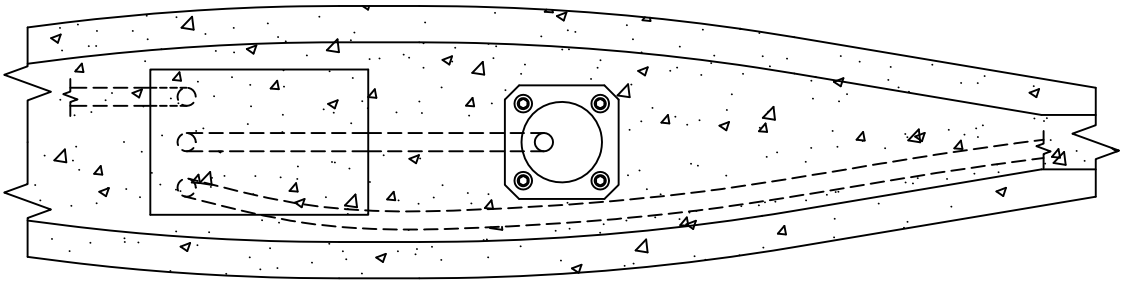

Notes:

1. Conduits shall be a minimum of 2". See page ODL REF-2.90 for pertinent Cat IDs and C/Us for the conduit.
2. See page FB-1.10 for standard pullboxes.

FOUNDATIONS
PRECAST CONCRETE FOUNDATION

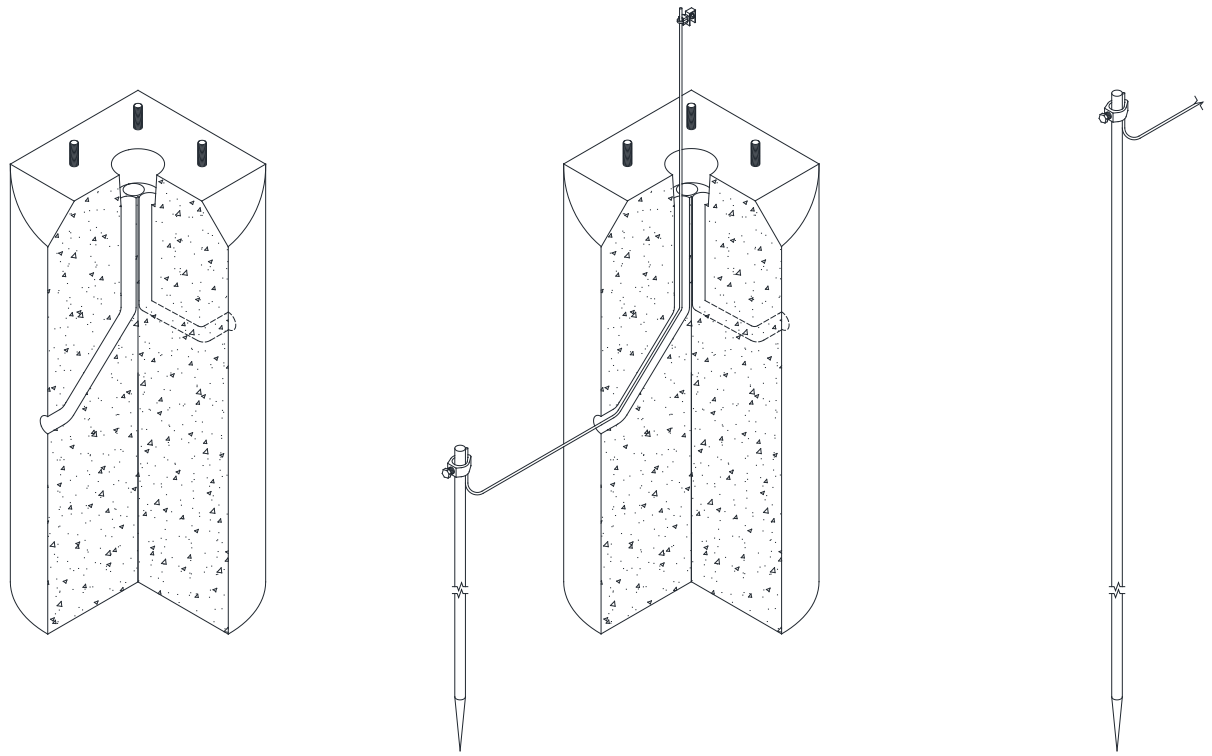

Description:	C/U	Cat ID	Weight (lbs)
Foundation - Suitable for use on all steel, aluminum, fiberglass and concrete poles	Direct buried fiberglass poles do not need a foundation or a pole ground (see note 5)		
Foundation - Concrete 24” D x 48” H x 12” BC x 1” anchor bolts, includes Ground Rod, Ground Rod Connector, #4 Cu wire, and Handhole Connector	**ESFD2448121**	-	1850
Foundation - Concrete 24” D x 48” H x 12” BC x 1” anchor bolts Foundation Only	**ESFD2448121N**	54541	1850
Ground Rod, Ground Rod Connector, #4 Cu wire, and Handhole Connector Only	**ESGRD**	51423	-

Notes:
1. All metal and concrete poles need to have a ground rod installed for grounding.
2. Grounding plate is at the back of the pole handhole.
3. Do not leave ground wire exposed. Run ground up through foundation.
4. 12” bolt circle (BC) foundation will accommodate breakaway transformer base (T-base).
5. NESC requirement of a minimum of 4 grounds per mile must still be satisfied in design. All LED streetlight circuits shall be grounded at the pole regardless of pole material for the surge protective device (SPD) to operate properly.

FOUNDATIONS
STEEL HELIX FOUNDATION

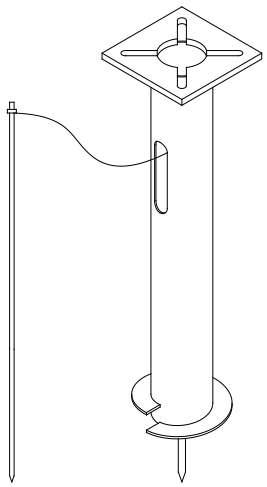

Description:	C/U	Cat ID	Weight (lbs)
Foundation - Suitable for use on all steel, aluminum, fiberglass and concrete poles	Direct buried fiberglass poles do not need a foundation or a pole ground (see note 5)		
Steel Helix Foundation, 1” Anchor bolts, range of 8-3/4” BC to 17” BC with hardware kit Suitable for poles 30 ft in height or less for clay soil conditions.	**ESPMPABSLL**	106592	175
Steel Helix Foundation, 3/4” Anchor bolts, range of 7” BC to 15” BC with hardware kit Suitable for poles 20 ft in height or less for clay soil conditions.	**ESPMPABSL**	209095	154
For poles taller than 30 ft in height, contact Electric Distribution Standards			
Ground Rod, Ground Rod Connector, #4 Cu wire, and Handhole Connector Only	**ESGRD**	51423	-

Notes:
1. All metal and concrete poles need to have a ground rod installed for grounding.
2. Grounding plate is at the back of the pole handhole.
3. Do not leave ground wire exposed. Run ground up through foundation.
4. Metal Helix foundation will accommodate breakaway bolts. See ODL CONST-C.40 for installation guidance.
5. NESC requirement of a minimum of 4 grounds per mile must still be satisfied in design. All LED streetlight circuits shall be grounded at the pole regardless of pole material for the surge protective device (SPD) to operate properly.
6. Do not install metal helix foundations in areas with highly acidic or corrosive soils.
7. Do not install metal helix foundations in rocky soil conditions. A precast concrete foundation or pour-in-place concrete foundation is preferred for rocky soil conditions.

FOUNDATIONS
NON-BREAKAWAY TRANSFORMER BASE (T-BASE)

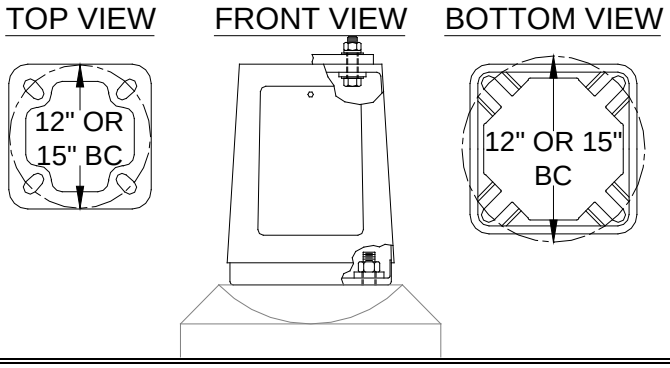

Description:	C/U	Cat ID	Color
Non-Breakaway Base: Steel 12” BC top, 12” BC bottom	**ESBS12X12**	54231	Galvanized
Non-Breakaway Base: Steel 12” BC top, 15” BC bottom	**ESBS12X15**	54230	Galvanized
Non-Breakaway Base: Steel 15” BC top, 15” BC bottom	**ESBS15X15**	69782	Galvanized

Notes:
1. None of these transformer bases (T-bases) are breakaway T-bases. For breakaway T-base application please see ODL REF- 4.20.
2. Non-Breakaway T-bases shall only be used when the use of pullboxes is impossible. Please contact Electric Distribution Standards for further guidance on the use of T-bases.
3. The Bolt Circle (BC) on the bottom of the non-breakaway T-base is where it bolts to the foundation and the Bolt Circle (BC) on the top is where the pole bolts onto the T-base.

FOUNDATIONS
BREAKAWAY SUPPORT - TRANSFORMER BASE (T-BASE)

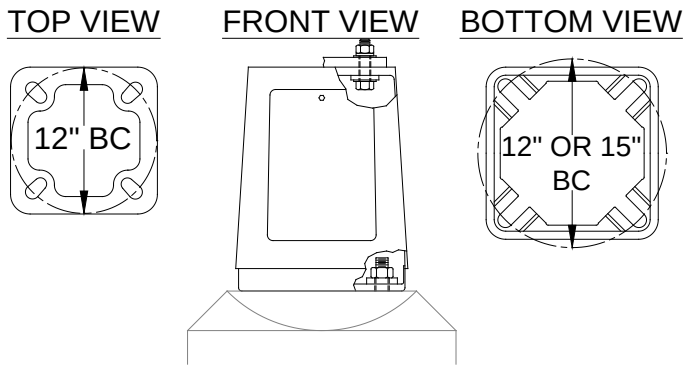

Description:	C/U	Cat ID	Color
Breakaway Base: Aluminum 12” BC top, 12” BC bottom	**ESBS12X12BRK**	54519	Grey
Breakaway Base: Aluminum 12” BC top, 15” BC bottom	**ESBS12X15BRK**	54518	Grey

Notes:
1. The Bolt Circle (BC) on the bottom of the breakaway T-base is where it bolts to the foundation and the Bolt Circle (BC) on the top is where he pole bolts onto the T-base.
2. No extra bolts are needed to use the breakaway T-base. The breakaway T-base includes the necessary nuts, washers, and bolts to attach to the pole.
3. Please review page ODL REF-4.20 for guidance on the application of breakaway T-bases.

FOUNDATIONS
BREAKAWAY SUPPORT - BREAKAWAY BOLTS

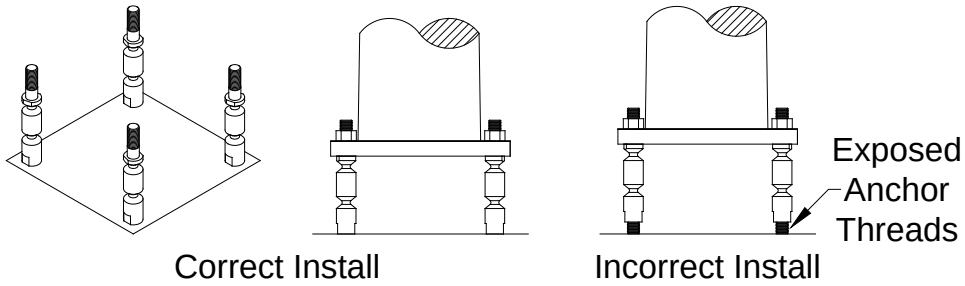

Description:	C/U	Cat ID	Color
Breakaway Bolts: Steel, for 1” Dia Bolts, Cat ID provides a Qty “4” breakaway bolts	**ESPMBKAWAY**	106587	Grey

Notes:

1. The breakaway bolt must be snug against the foundation without any of the anchor bolt exposed. If the anchor bolt is not covered by the breakaway bolt, it may not operate properly. The use of a reaction plate may be necessary if the breakaway bolt does not sit flush against the foundation.
2. No extra bolts are needed to use the breakaway bolts. The breakaway bolts include the necessary nuts, washers, and bolts to attach to the pole.
3. Please review page ODL REF-4.25 for guidance on the application of breakaway bolts.

FOUNDATIONS
BREAKAWAY SUPPORT - BREAKAWAY BOLTS
SAFETY BASE

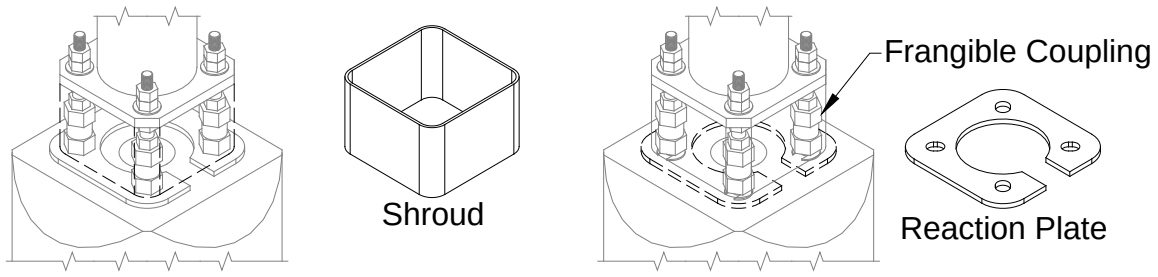

Description:	C/U	Cat ID	Color
Safety Base includes coupler kit, shroud and reaction plate	**ESPMBKAWAYS**	221152	Grey

Notes:
1. The frangible couplings must be snug against the reaction plate without any of the anchor bolt exposed.
2. The use of a reaction plate is required for the Safety Base to operate correctly when impacted.
3. No extra hardware is needed to use the Safety base. The Safety Base kit includes all the necessary hardware and material needed to attach to the pole.
4. Please review page ODL REF-4.30 for guidance on the application of the Safety Base.

FOUNDATIONS
DECORATIVE BASE - WASHINGTON

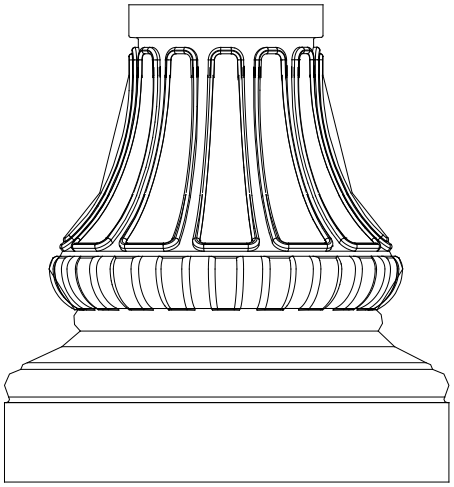

Decorative Base			
Description: Elastomer	**C/U**	**Pole Cat ID**	**Color**
Washington Base 17” X 21”	**ESBS17X21WASHBK**	211259	Black
Washington Base 17” X 21”	**ESBS17X21WASHFG**	214316	Federal Green
Washington Base 17” X 21”	**ESBS17X21WASHDB**	218908	Dark Bronze (Brown)

Notes:

1. Design poles using pages PL-8.10 and PL-12.10. These bases have only been approved for use on the 12 ft and 14 ft - 6” foundation mounted fluted aluminum poles and the foundation mounted 14 ft - 6” fluted fiberglass poles.
2. Design the foundation, pullbox, conductor, conduit, grounding, and streetlight fusing and streetlight circuit fusing; see FB-1.10, FB-2.10, ODL REF-INDEX and FB-INDEX.
3. Design Breakaway Supports (if needed); see pages ODL REF-4.20, ODL REF-4.25 and ODL REF-4.30.
4. Decorative bases are an added expense that must be requested for by the customer. They are only for aesthetic purposes.

FOUNDATIONS
DECORATIVE BASE - MADISON

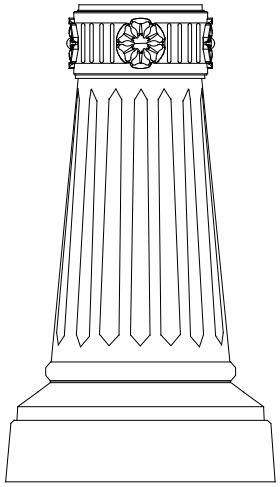

Decorative Base			
Description: Elastomer	**C/U**	**Cat ID**	**Color**
Madison Base 22” X 38”	**ESBS22X38MADISK**	211259	Black
Madison Base 22” X 38”	**ESBS22X38MADISG**	214316	Dark Green
Madison Base 22” X 38”	**ESBS22X38MADISFG**	218908	Federal Green
Madison Base 22” X 38”	**ESBS22X38MADISZ**	218908	Dark Bronze (Brown)

Notes:
1. Design poles using page PL-5.10. These bases have only been approved for use on the 28 ft Two Bolt Evans poles. Please contact Electric Distribution Standards for any other applications.
2. Design the foundation, pullbox, conductor, conduit, grounding, and streetlight fusing and streetlight circuit fusing; see FB-1.10, FB-2.10, ODL REF-INDEX and FB-INDEX.
3. Design Breakaway Supports (if needed); see pages ODL REF-4.20, ODL REF-4.25 and ODL REF-4.30.
4. Decorative bases are an added expense that must be requested for by the customer. They are only for aesthetic purposes.

FOUNDATIONS
DECORATIVE BASE - STAPLETON

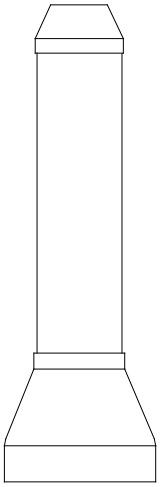

Decorative Base - Maintenance Only (PSCo)			
Description: Elastomer	**C/U**	**Cat ID**	**Color**
Stapleton Base 17.5” X 55”	**-**	215209	Federal Green

Notes:
1. These bases have only been approved for use on the steel poles installed in the Stapleton area in Denver.
2. Design the foundation, pullbox, conductor, conduit, grounding, and streetlight fusing and streetlight circuit fusing; see FB-1.10, FB-2.10, ODL REF-INDEX and FB-INDEX.
3. Design Breakaway Supports (if needed); see pages ODL REF-4.20, ODL REF-4.25 and ODL REF-4.30.
4. Decorative bases are an added expense that must be requested for by the customer. They are only for aesthetic purposes.

FOUNDATIONS
DECORATIVE BASE - DENVER

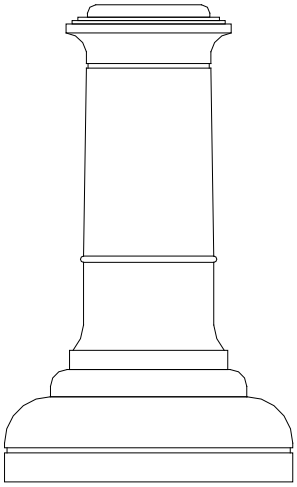

Decorative Base - Maintenance only (PSCo)			
Description: Elastomer	**C/U**	**Cat ID**	**Color**
Denver Base 11.5” X 55.75”	-	212599	Federal Green

Notes:

1. These bases have only been approved for use on the steel poles installed in the downtown area of Denver on traffic signal poles and steel poles 35 ft and taller.
2. Design the foundation, pullbox, conductor, conduit, grounding, and streetlight fusing and streetlight circuit fusing; see FB-1.10, FB-2.10, ODL REF-INDEX and FB-INDEX.
3. Design Breakaway Supports (if needed); see pages ODL REF-4.20, ODL REF-4.25 and ODL REF-4.30.
4. Decorative bases are an added expense that must be requested for by the customer. They are only for aesthetic purposes.

FOUNDATIONS
HIGH MAST
CONTROLLER CABINET - 100 A

Cabinet Cat ID 54788

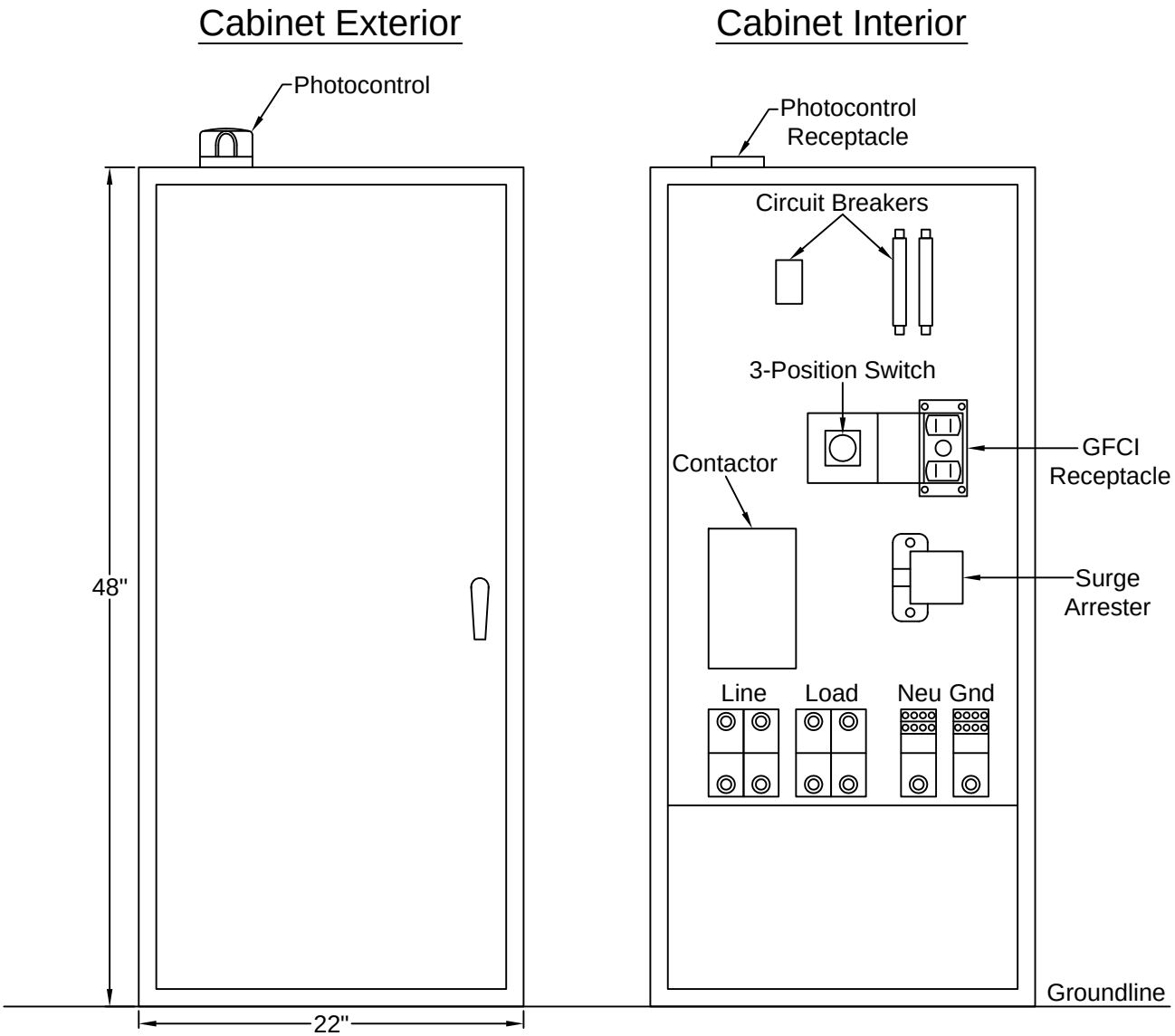

Notes:

1. Controller cabinet must be stainless steel due to corrosion problems.
2. Controller cabinet should not be installed in drainage areas where it will be regularly exposed to standing water.
3. Controller cabinet ships complete with all of the components pre-assembled as shown above. There is no need to order components individually.
4. Controller cabinet is mounted on a 10" x 22" concrete pad.

FOUNDATIONS
HIGH MAST
CONTROLLER CABINET - 200 A

Cabinet Cat ID 212001

Cabinet Exterior Side View

Cabinet Exterior Front View

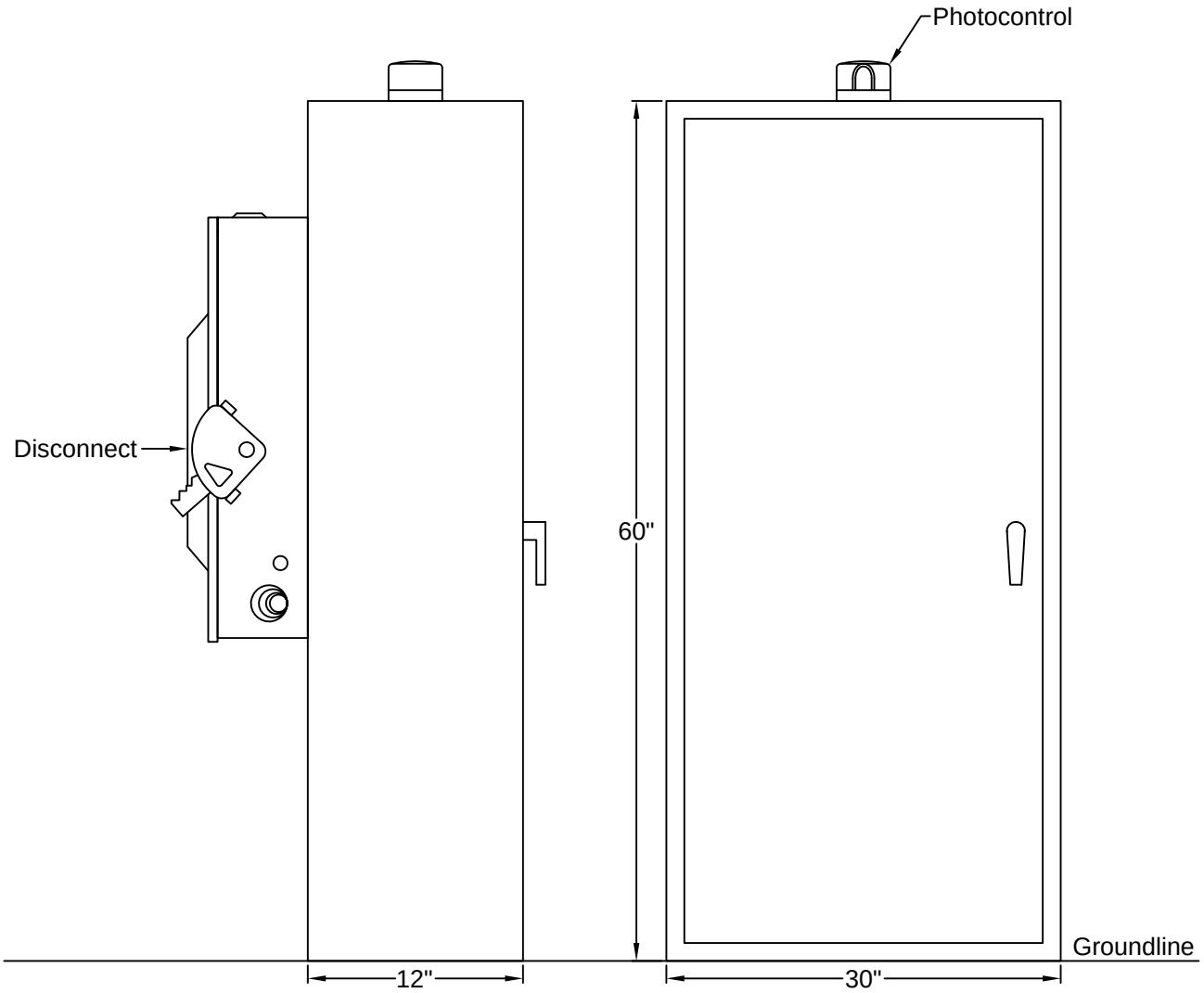

Notes:

1. Controller cabinet must be stainless steel due to corrosion problems.
2. Controller cabinet should not be installed in drainage areas where it will be regularly exposed to standing water.
3. Controller cabinet ships complete with all of the components pre-assembled inside the cabinet. There is no need to order components individually.
4. For cabinet interior details, see page FB-12.00.
5. Controller cabinet is mounted on a 12" x 30" concrete pad.

ELECTRIC DISTRIBUTION DESIGN AND CONSTRUCTION STANDARDS

OUTDOOR LIGHTING

ODL REFERENCE

ODL REFERENCE INDEX

TITLE Design Page	PAGE
Operating Company Standard Luminaires and Colors	ODL REF-0.25
Outdoor Lighting in Expert Designer	ODL REF-0.50
NESC vs. NEC in Utility Streetlighting	ODL REF-1.00
LED Light Sources	ODL REF-1.05
LED Light Sources	ODL REF-1.06
Streetlight Structural Overview	ODL REF-1.10
IES Lighting Patterns	ODL REF-1.20
Roadway Lighting Layout and Streetlight Hand Hole Placement	ODL REF-1.30
Streetlight Circuit Layout	ODL REF-1.40
Pullbox Placement Guide	ODL REF-2.10
Pullbox - Traffic and Incidental Traffic	ODL REF-2.20
Pullbox in Wall Application	ODL REF-2.25
Streetlighting Cables and Conductor	ODL REF-2.30
Streetlight Max Distance and Luminaire per Conductor Run - UG Fed	ODL REF-2.40
Streetlight Max Distance and Luminaire per Conductor Run - UG Fed	ODL REF-2.41
Streetlight Max Distance and Luminaire per Conductor Run - UG Fed	ODL REF-2.42
Streetlight Max Distance and Luminaire per Conductor Run - OH Fed	ODL REF-2.44
Streetlight Conductor Impedances	ODL REF-2.45
Individual Streetlight Fusing	ODL REF-2.50
Pedestal and Transformer Streetlight Circuit Current Limiting Fusing	ODL REF-2.60
Overhead to Underground Streetlight Circuit Flag Indicator Fusing	ODL REF-2.70
Terminal Blocks	ODL REF-2.80
Conduit and Conduit Fittings	ODL REF-2.90
Tracer Wire Guidance	ODL REF-2.95
Foundation, Concrete	ODL REF-4.10
Foundation, Steel Helix	ODL REF-4.15
Breakaway Support - Transformer Base (T-Base)	ODL REF-4.20
Breakaway Support (Breakaway Bolts)	ODL REF-4.25
Breakaway Support - Breakaway Bolts Safety Base	ODL REF-4.30
Non-Breakaway - Transformer Base (T-Base)	ODL REF-4.40
Relay and Relay Application Guidance	ODL REF-5.10
Bridge and Overpass Pole Construction	ODL REF-5.35

ODL REFERENCE
OPERATING COMPANY
STANDARD LUMINAIRES AND COLORS

Standard Luminaires and Colors by Operating Company.

Luminaires	NSPM	NSPW	PSCo	SPS
Cobrahead-HID Std Colors by Op-Co	**Yes** Grey	**Yes** Grey	**Yes** Grey	**Yes** Grey
Cobrahead - LED Std Colors by Op-Co	**Yes** Grey and Federal Green	**Yes** Grey and Federal Green	**Yes** Grey and Federal Green	**Yes** Grey and Federal Green
Curvilinear Std Colors by Op-Co	No	**Yes** All Colors	**Yes** All Colors	No
Rectilinear Std Colors by Op-Co	**Yes** All Colors	**Yes** All Colors except Dark Green	**Yes** All Colors except Dark Green	No
Pendant Std Colors by Op-Co	**Yes** All Colors except Federal Green	**Yes** All Colors except Dark Green	**Yes** All Colors except Dark Green	No
Nightwatch Color N/A	**Yes** - 100 W Only	**Yes**	No	No
Contemporary Std Colors by Op-Co	**Yes** All Colors	**Yes** All Colors	**Yes** All Colors	No
Traditional Std Colors by Op-Co	**Yes** All Colors	**Yes** All Colors except Dark Green	**Yes** All Colors except Dark Green	No
Lantern Std Colors by Op-Co	**Yes** All Colors except Federal Green	**Yes** All Colors except Dark Green	**Yes** All Colors except Dark Green	No
Acorn Std Colors by Op-Co	**Yes** All Colors except Federal Green	**Yes** All Colors except Dark Green	**Yes** All Colors except Dark Green	No
Vernon Std Colors by Op-Co	**Yes** All Colors	No	No	No
Wood Pole Cobrahead Colors N/A	**Yes**	**Yes**	**Yes**	**Yes**
Wall and Ceiling Colors N/A	No	No	**Yes**	No
High Mast Colors N/A	No	No	**Yes**	No
Traffic Signal Poles Colors N/A	No	No	**Yes** - Limited (see note 3)	No

Notes:

1. Operating Company standard colors and luminaires may change from time to time. Any future changes will be made through a newsletter or future revision to the ODL Manual.
2. Contact your Operating Company Outdoor Lighting Department or Electric Distribution Standards with any questions.
3. Traffic Signal Poles are only installed and maintained in the City and County of Denver; please contact PSCO Outdoor Lighting department with any questions.

OUTDOOR LIGHTING IN BENTLEY UTILITY DESIGNER

Selecting a streetlight Pole

When installing a street light pole use the **Pole-Ornamental** feature editor. Select the **Height, Material, Color, Foundation,** and **Pole/Arm Style**.

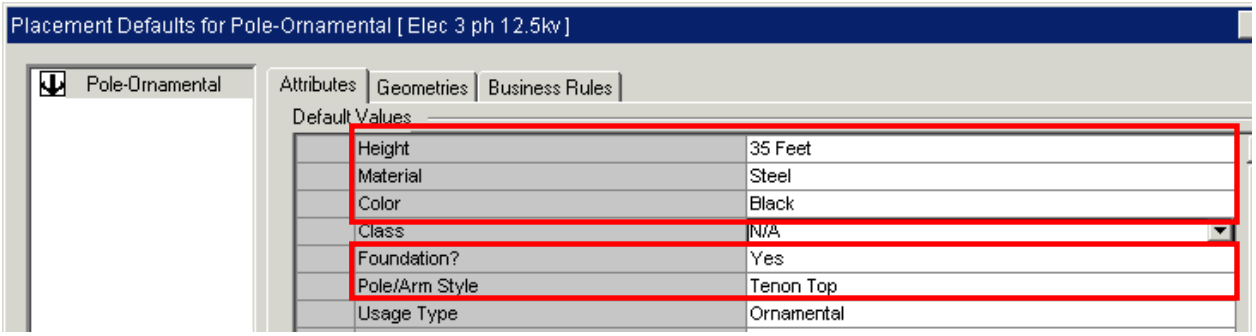

Selecting a Luminaire

When installing a luminaire use the **Street Light** feature editor. Select the **Head Type, Watts, Lamp Type,** and **Color**.

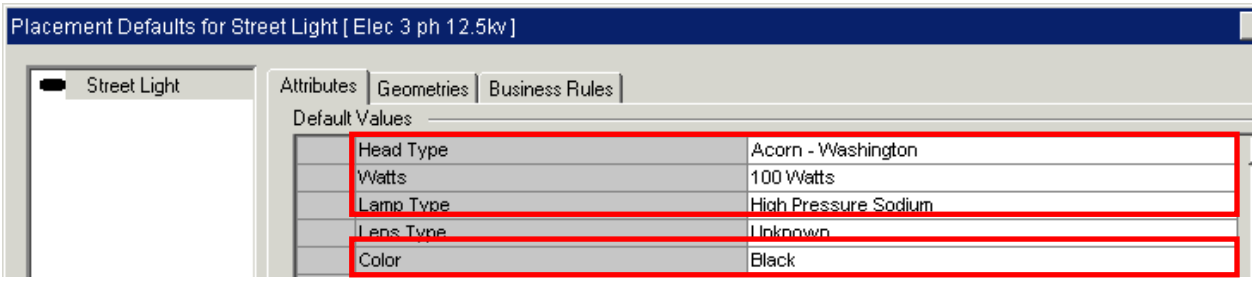

Selecting an Arm

When installing an arm use the **Street Light Arm** feature editor. Select the **Arm Length, Arm Style, Pole/Arm Style,** and **Color**.

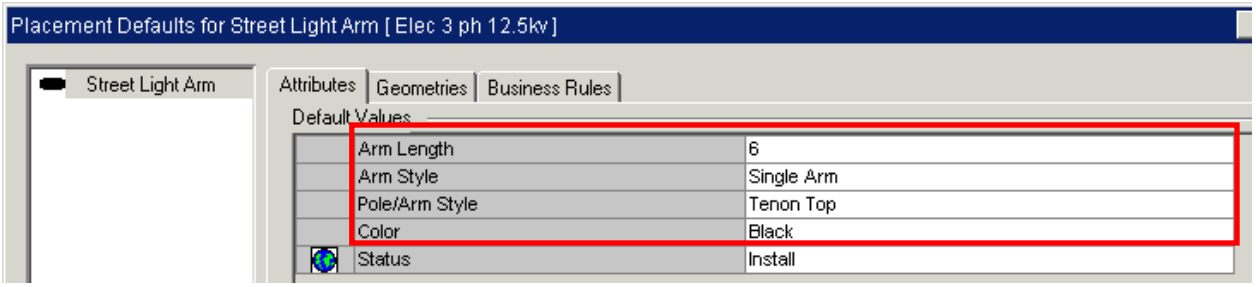

Selecting a Foundation

When installing a foundation use the **Street Light Foundation** feature editor. Select the **Size, Ground?, Type,** and **Breakaway Base?**.

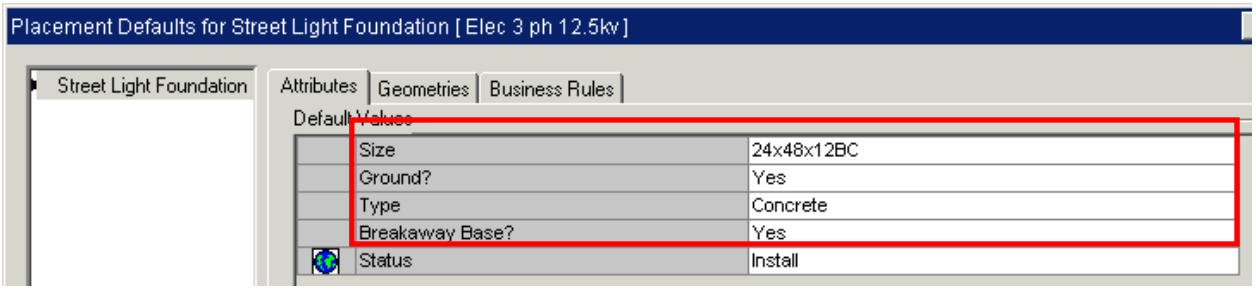

ANY QUESTIONS REGARDING THE STEPS ABOVE SHOULD BE ADDRESSED TO THE DESIGN STRATEGY AND PERFORMANCE GROUP.

ODL REFERENCE
NESC VS. NEC IN UTILITY STREETLIGHTING

The purpose of this document is to provide guidance on when to apply the NEC and when to apply the NESC. This document is for Xcel Energy employees, outside design firms, and various contractors. There have been some misunderstandings on this issue in recent years and this is intended to clarify which code applies for Xcel Energy owned streetlights.

Xcel Energy is a utility and therefore follows the NESC in electrical design and construction. NEC inspectors do not have jurisdiction when it comes to utility installations.

Per the NEC 90-2(B)5:

(B) Not Covered. This Code does not cover the following:

5. Installations under the exclusive control of an electric utility where such installations
   a. Consist of service drops or service laterals, and associated metering, or
   b. Are on property owned or leased by the electric utility for the purpose of communications, metering, generation, control, transformation, transmission, or distribution of electric energy, or
   c. Are located in legally established easements or rights of way, or
   d. Are located by other written agreements either designated by or recognized by the public service commissions, utility commissions, or other regulatory agencies having jurisdiction for such installations. These written agreements shall be limited to installations for the purpose of communications, metering, generation, control, transformation, transmission, or distribution of electric energy where legally established easements or rights - of - way cannot be obtained. These installations shall be limited to federal lands, Native American reservations through the U.S. Department of the Interior Bureau of Indian Affairs, military bases, lands controlled by port authorities and state agencies and departments, and lands owned by railroads.

For Xcel Energy as a Utility per the NESC, the neutral conductor serves as both the grounding conductor and the neutral conductor. A separate grounding conductor and a separate neutral conductor is not required.

Per the NESC 092B1:

(B) Alternating current systems that are required to be grounded

1. 750 V and below
   The point of the grounding connection on a wye-connected three-phase four-wire system, or on a single-phase three-wire system, shall be the neutral conductor. On other one-, two-, or three-phase systems with an associated lighting circuit or circuits, the point of grounding connection shall be on the common circuit conductor associated with the lighting circuits.

Xcel Energy as a Utility per the NESC can and does use reduced neutrals.

Per the NESC 093C2:

(C) Ampacity and strength

For the bare grounding conductors, the short time ampacity is the current that the conductor can carry for the time during which the current flows without melting or affecting the design characteristics of the conductor. For insulated grounding conductors, the short time ampacity is the current that the conductor can carry for the applicable time without affecting the design characteristics of the insulation. Where grounding conductors at one location are paralleled, the increased total current capacity may be considered.

2. System grounding conductors for multi-grounded alternating current systems
   The system grounding conductors for an ac system with grounds at more than one location exclusive of grounds at individual services shall have continuous total ampacities at each location not less than one-fifth that of the conductors to which they are attached. (See also Rule 93C8.)

ODL REFERENCE
LIGHT EMMITING DIODE (LED) LIGHT SOURCES

The purpose of this document is to provide an overview and general guidance on LED luminaires and their application. This document is for Xcel Energy employees, outside design firms, and various contractors. Traditionally Xcel Energy has standardized on High Intensity Discharge (HID) light sources; High Pressure Sodium (HPS), Metal Halide (MH), and Mercury Vapor (MV) and High Frequency Generator based technology such as Induction and CFLs. Beginning in 2016 LED luminaires will be another option that Xcel Energy is offering to customers in the states where we have received regulatory approval.

Background

Light Emitting Diodes (LEDs) are a relatively new source of light for street lighting that is based on the exciting of semiconductor diodes to emit light. LED lamps are a complex system with three major subsystems: chip, phosphor and the package. To achieve utility grade roadway lighting necessitates the use of lighting class LEDs which require defined luminous flux, chromaticity and efficient thermal management.

Functional Equivalence to HID

Xcel Energy has selected standard replacement options for 100 W HPS, 150 W HPS, 250 W and 400 W HPS side-mounted roadway luminaires. The new LED luminaires can be used for both new installations and retrofit installations. The LED luminaires are intended to be functional equivalents in photometric performance and the mechanical interface requirements for installation. This will allow us to simply replace the luminaire without making any other adjustments to the existing HID installations.

There is a general equivalence across certain wattages between HPS, MV and MH. This equivalence will be transparent with LED Luminaires. Customers with Metal Halide and Mercury Vapor luminaires have the option to switch these luminaires to LED luminaires.

The functional equivalence in illumination performance, mechanical requirements, and conformance to the Xcel Energy's, electrical, optical and environmental technical specifications Illumination equivalence determined by photometric testing and simulations will enable the Xcel Energy to perform retrofits without any significant optical degradation. The mechanical requirements will allow for direct replacements in the field without significant re-work for the crews and will support any future routine and non-routine maintenance requirements.

Benefits of LED

LED luminaires present certain features that are considered superior to all High Intensity Discharge (HID) based luminaires including HPS lamp luminaires. The LED fixtures have significantly lower glare, a key feature for improved nighttime visibility under artificial light. The LED fixtures also have superior spectral effects. They are considered a white source of light with nominal Color Correlated Temperature (CCT) ratings of 4000 K. 4000 K was selected because it closely matches the approximate CCT of moonlight. Correlated Color Temperature is the temperature in kelvin of a blackbody whose chromaticity most nearly resembles that of the light source in question. LEDs are considered white sources of light, lying in the blue spectrum. White Sources of light have been shown to present superior nighttime visibility.

ODL REFERENCE
LIGHT EMMITING DIODE (LED) LIGHT SOURCES

Benefits of LED

LED luminaries have much higher Color Rendering Index (CRI) ratings than any of the traditional sources of light used for roadway lighting including HID luminaires such as High Pressure Sodium and Metal Halide. Color Rendering Index is a measure of the degree of color shift that a set of test-color samples undergoes when illuminated by the light source in question, as compared with those same test color samples when illuminated by a reference illuminant of comparable color temperature. All the approved luminaires have a minimum Color Rendering Index rating of 70 per Xcel Energy specifications. The highest possible rating any source is 100. This index represents the ability of the human eye to discern color in artificial light as compared to daylight. This is a key indicator of quality of light output. The LED luminaires present significantly higher efficacy ratings as compared to any of the HID fixtures. This will allow Xcel Energy and the customers to realize significant energy savings.

Grounding

LED luminaires are solid state devices that are vulnerable to voltage surges inherent on any power circuit. On the other hand because HID luminaires rely on ballasts for voltage regulation, and ballasts are current limiting devices that are not as susceptible to the surges. Xcel Energy has specified supplementary surge suppression devices to come standard with the LED luminaires. For the Surge Protective Devices to perform optimally we must establish the lowest impedance path to ground. This is the reason we shall require that a ground is installed at all LED luminaire installations. Because LED luminaires are solid state devices that are capacitive in nature, we anticipate higher in-rush currents as the lights are turned on. The higher inrush currents can potentially damage the contact points in the relays of regular photocontrol. To counter this we have specified more robust photocontrols commonly referred to as long life photocontrols to be paired up with the LED luminaires. The long life photocontrols also provide supplementary surge protection to the LED lights. The long life photocontrols are expected to last longer than the regular photocontrols closely matching the rated the life of the luminaires.

Xcel Energy is evaluating LED options for the decorative/ornamental streetlights. Specifications covering electrical, mechanical, optical and environmental performance have been developed. The expectation is that once pricing, performance and rated life improve for these fixtures we will then include them in our market basket.

Please direct any questions on this technology to Electric Distribution Standards.

ODL REFERENCE
STREETLIGHT STRUCTURAL OVERVIEW

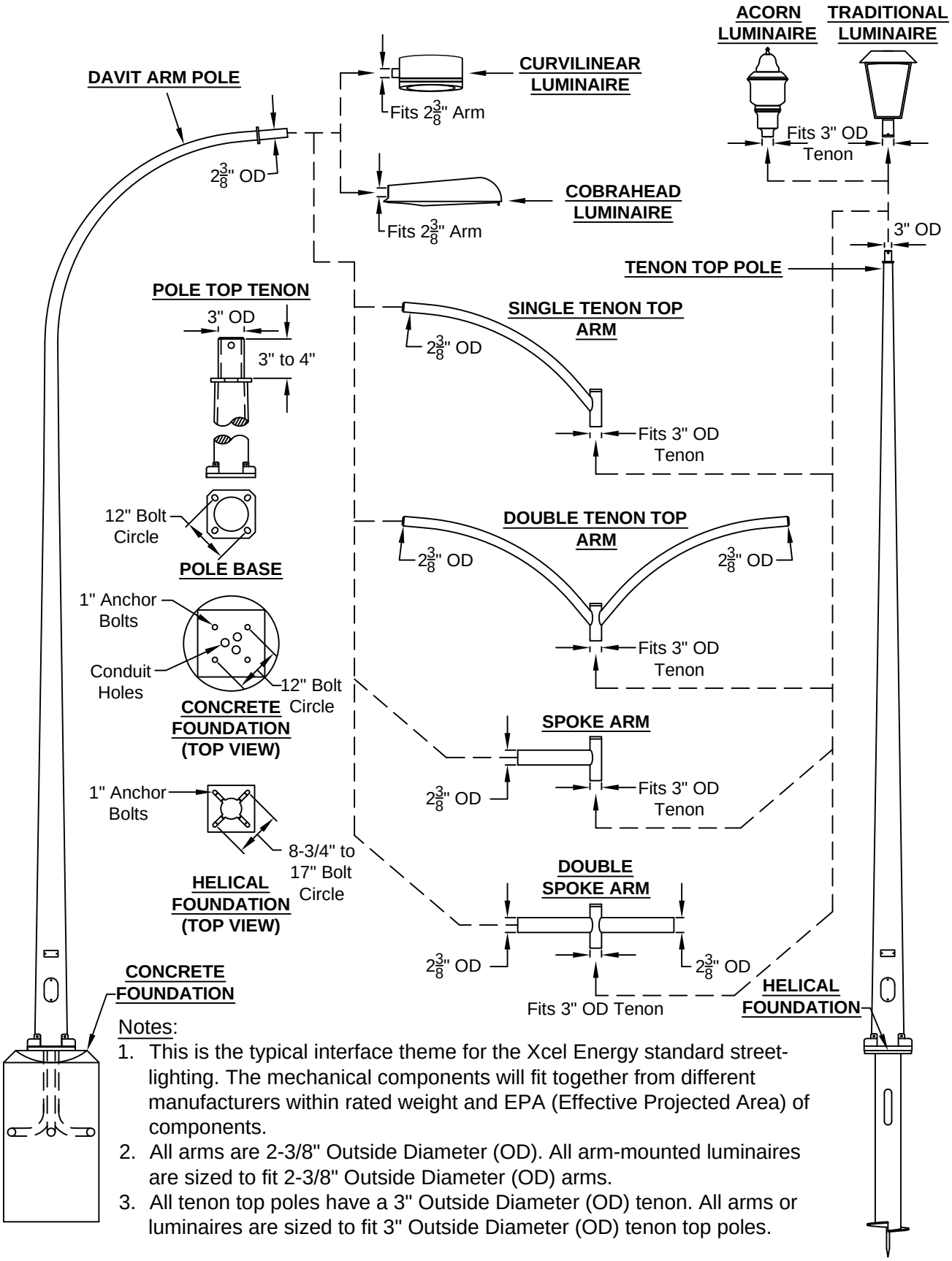

Notes:

1. This is the typical interface theme for the Xcel Energy standard street-lighting. The mechanical components will fit together from different manufacturers within rated weight and EPA (Effective Projected Area) of components.
2. All arms are 2-3/8" Outside Diameter (OD). All arm-mounted luminaires are sized to fit 2-3/8" Outside Diameter (OD) arms.
3. All tenon top poles have a 3" Outside Diameter (OD) tenon. All arms or luminaires are sized to fit 3" Outside Diameter (OD) tenon top poles.

ODL REFERENCE
IES LIGHTING PATTERNS

TYPE I
LIGHTING DISTRIBUTION

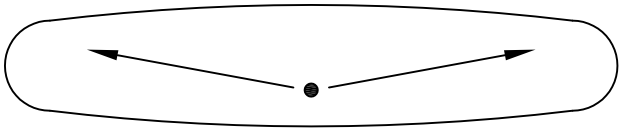

TYPE II
LIGHTING DISTRIBUTION

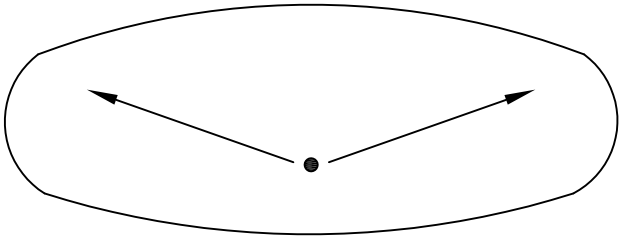

TYPE III
LIGHTING DISTRIBUTION

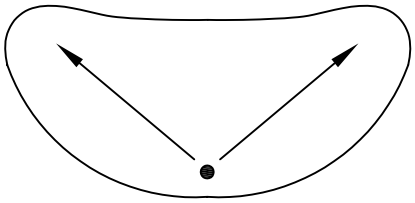

TYPE IV
LIGHTING DISTRIBUTION

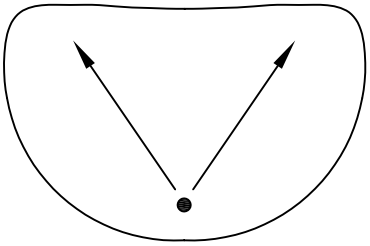

TYPE V
LIGHTING DISTRIBUTION

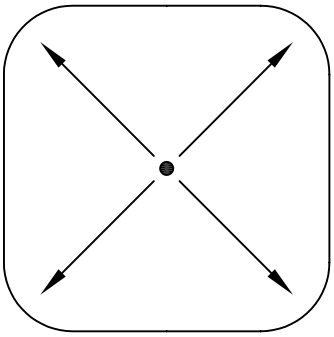

Notes:
1. Xcel Energy uses primarily Type III Lighting Distribution.
2. Type III Lighting Distribution is best suited for roadway and general area illumination.

ODL REFERENCE
ROADWAY LIGHTING LAYOUT AND STREETLIGHT HAND HOLE PLACEMENT

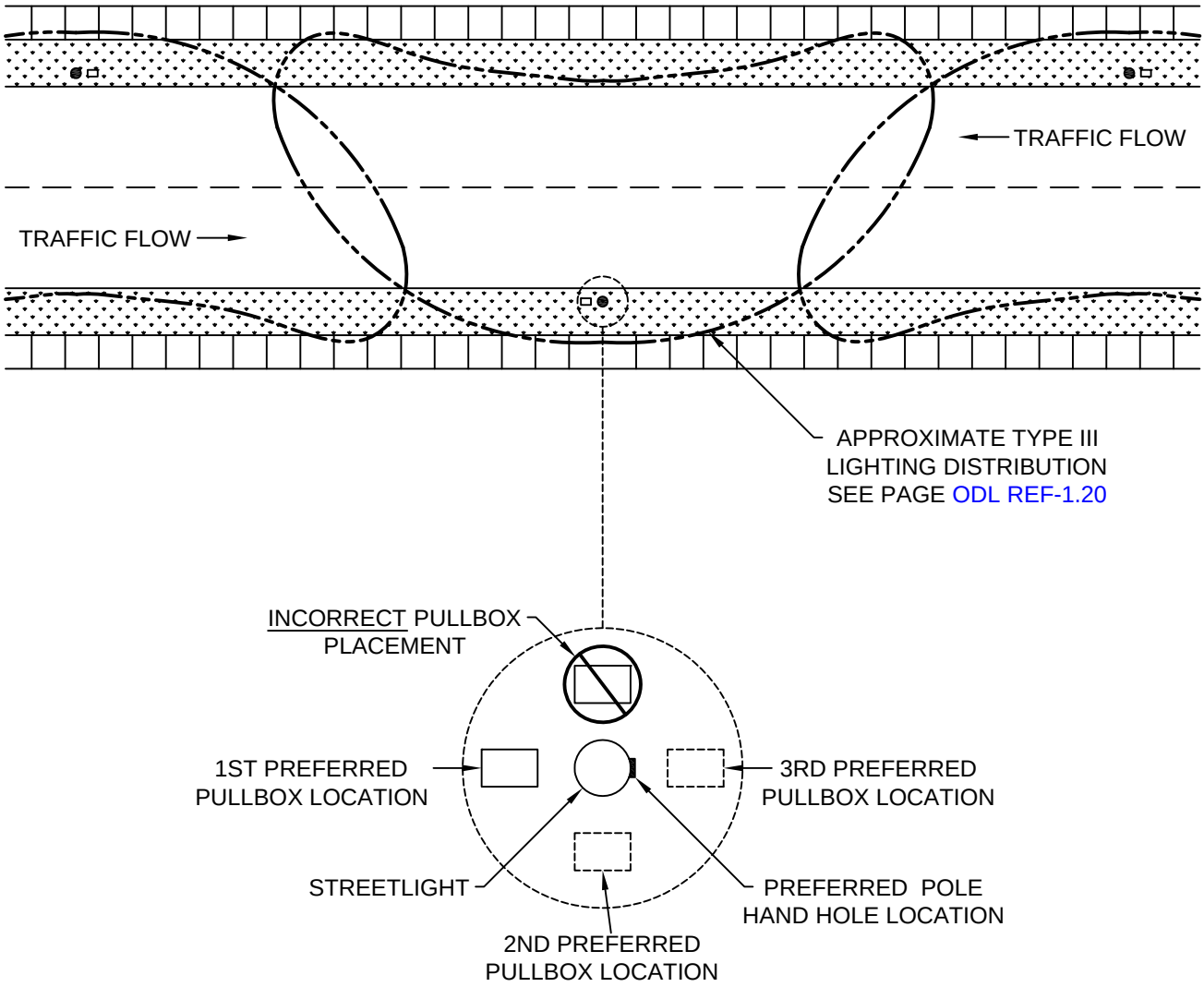

Notes:

1. Xcel Energy standard luminaires are type III lighting distribution. The lighting pattern shown above for type III lighting distribution is for example only. Consult Illumination Engineering Society (IES) and/or manufacturer for exact lighting pattern.
2. The installed location for streetlight pullbox should be on the upstream side of traffic from the streetlight whenever possible. Local conditions will determine exact location. Street side installation of pullbox is forbidden.
3. The preferred pullbox locations were chosen so as to minimize damages from accidents.
4. Place streetlight hand hole on opposite side of traffic flow so lineman can see on-coming traffic.

ODL REFERENCE
STREETLIGHT CIRCUIT LAYOUT

Underground Streetlight Feed, Branch Circuit (Duplex cable)

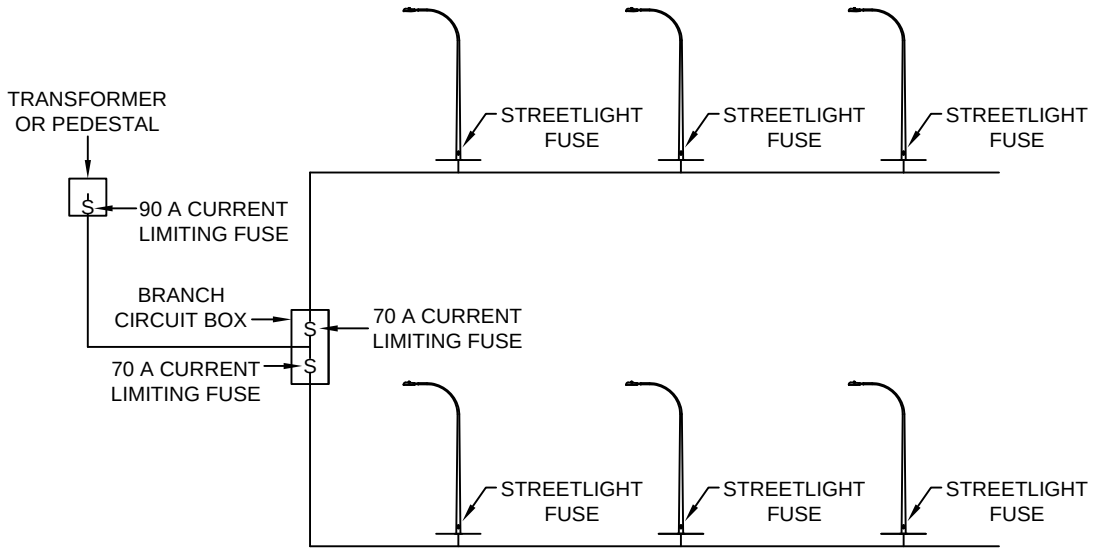

Underground Streetlight Feed (Duplex cable) See ODL REF-2.30

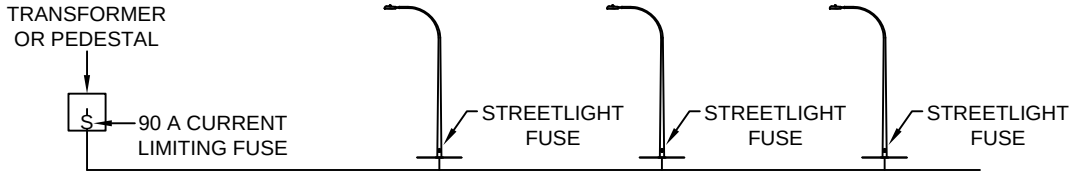

Underground Streetlight Feed (Triplex cable) See ODL REF-2.30

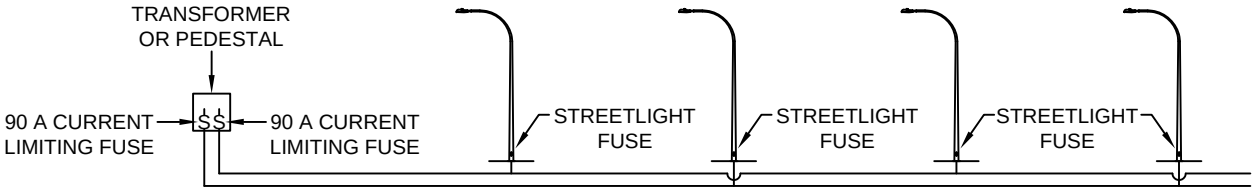

Overhead to Underground Streetlight Feed (Triplex cable) See ODL REF-2.30

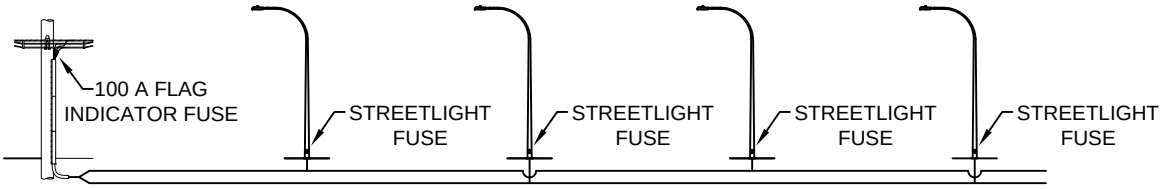

ODL REFERENCE
PULLBOX PLACEMENT GUIDE

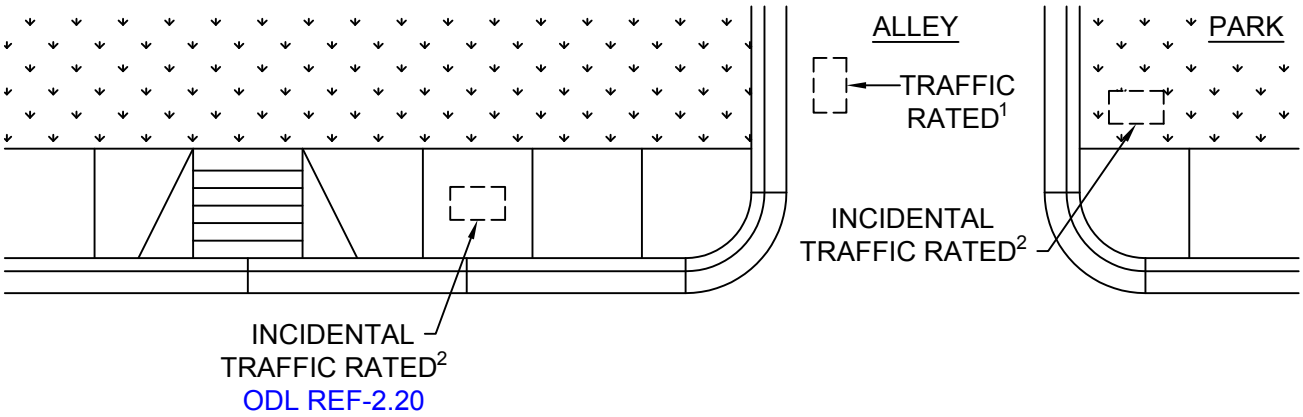

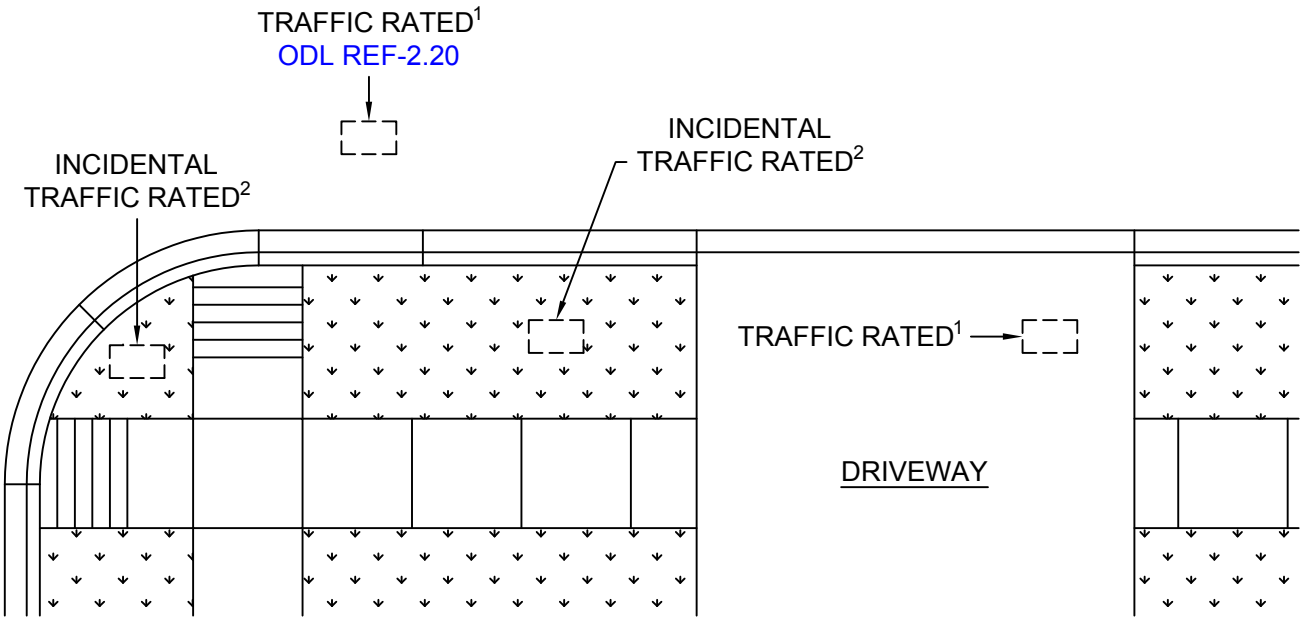

1. In cases where you need a **Traffic Rated pullbox**, the American Association of State Highway and Transportation Officials (AASHTO) H20 criteria is used. The AASHTO H20 rating is suitable for locations such as driveways, alleys, streets, and other areas where vehicle traffic is expected. The lid on these boxes is made of metal and as a result, must be properly grounded. These are significantly heavier and this is due to the heavy loading that these pullboxes will encounter from vehicular traffic. The AASHTO rating will be clearly marked on both the lid and the body of the pullbox.

2. Xcel Energy has adopted the American National Standards Institute (ANSI) Tier rating for **Incidental Traffic Rated pullboxes**. ANSI has implemented a testing criteria for side, corner, and top loading. This should eliminate or greatly reduce any pullbox failures experienced from loading. The proper application of these pullboxes is in areas where there might be vehicle loading. In addition, these pullboxes are made of corrosion resistant materials and are following Western Underground so the physical interface and hardware between manufacturers will be compatible. The ANSI rating and manufacturer will be clearly marked on both the lid and body of the pullbox.

ODL REFERENCE
PULLBOX - TRAFFIC AND INCIDENTAL TRAFFIC

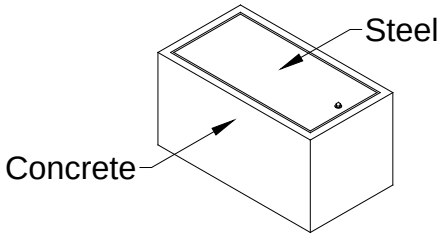

AASHTO

Pullbox - Traffic Rated [1]			
Description:	**C/U**	**Cat ID**	**Color**
Pullbox body and lid, 14” x 24”, H20 rated	**ESEPH2014x20**	52683	Grey
Pullbox body and lid, 15” x 36”, H20 rated	**ESEPH2015x36**	52681	Grey

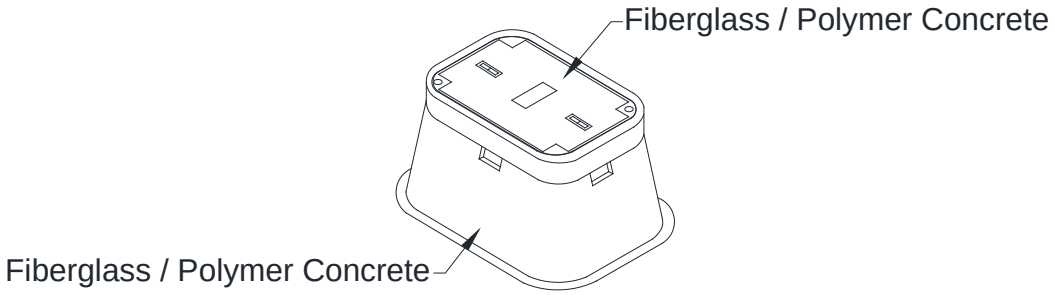

ANSI

Pullbox - Incidental Traffic Rated [2]			
Description:	**C/U**	**Cat ID**	**Color**
Pullbox body, 11” x 18”, TR8 rated [3]	**ESEPTR811x18**	215571	Grey
Pullbox lid, 11” x 18”, TR8 rated [3]		215570	Grey
Pullbox body, 13” x 24”, TR8 rated [3]	**ESEPTR813x24**	215569	Grey
Pullbox lid, 13” x 24”, TR8 rated [3]		215567	Grey

Notes:
1. Traffic rated pullbox is required when vehicle traffic will be driving over a location, such as an alley, street, driveway, etc.
2. Incidental traffic rated pullbox is required when there is a possibility there might be vehicle traffic such as a sidewalk, park, grass, other vegetation, etc. next to a roadway.
3. The pullbox body and pullbox lid for the Incidental Traffic Rated pullboxes are completely interchangeable with all approved manufacturers.

ODL REFERENCE
PULLBOX IN WALL APPLICATION

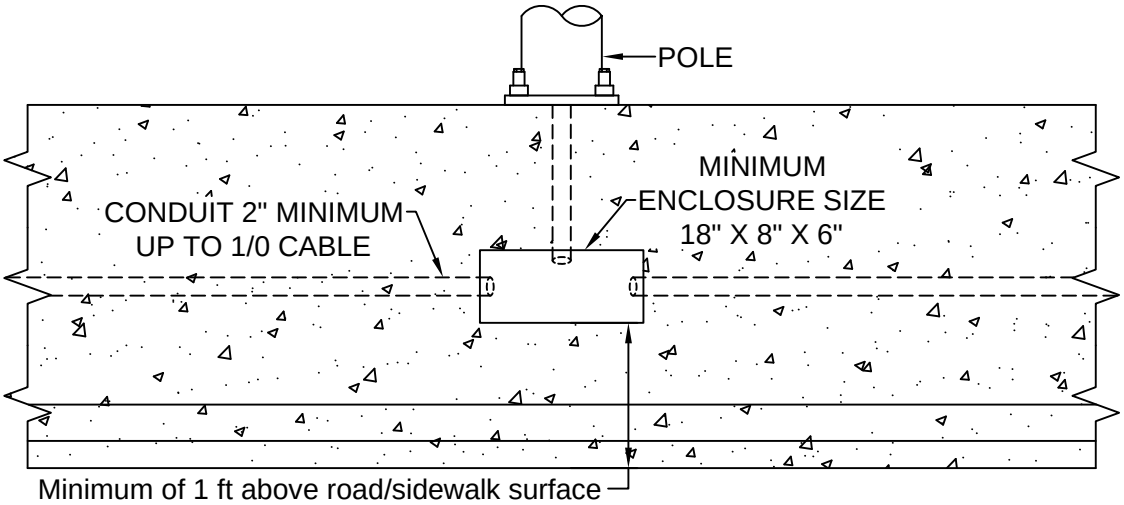

Notes:

1. Dimensions are to be no smaller than shown.
2. Stainless steel or hot dip galvanized box.
3. Stainless steel penta-head fasteners 1/2" minimum.

PREFERRED

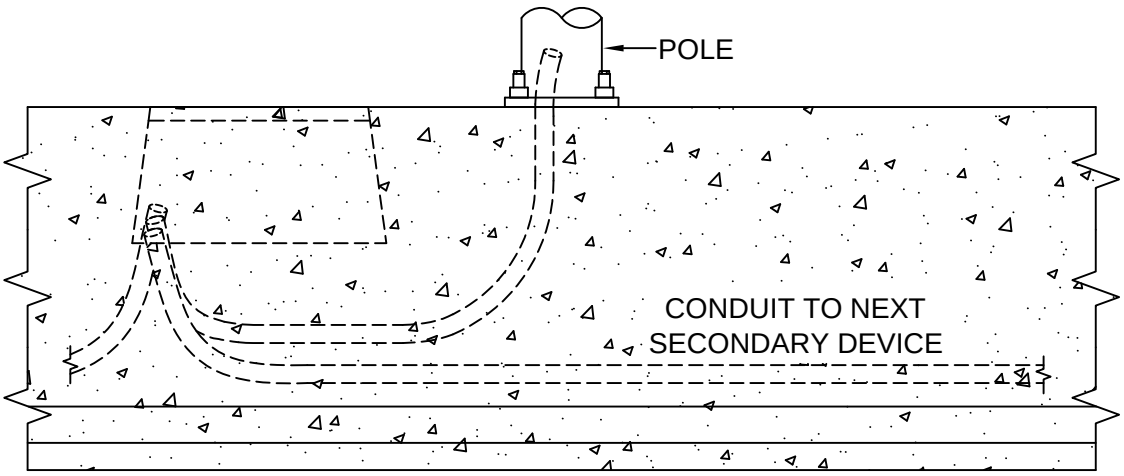

Installation of pullbox drain is recommended to remove water from pullbox interior.

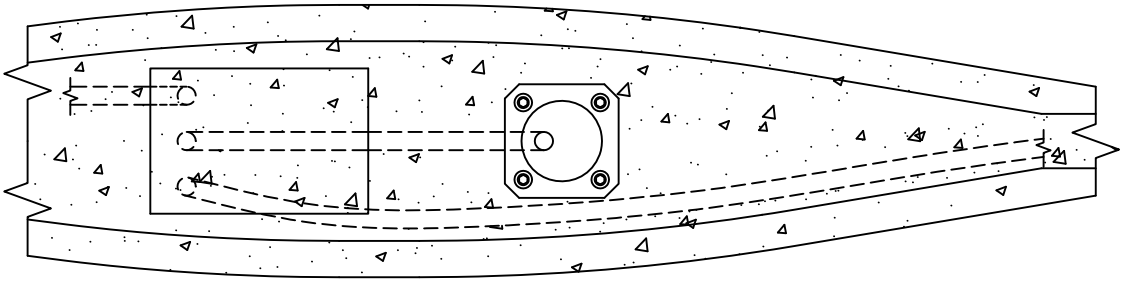

ODL REFERENCE
STREETLIGHT CONDUCTOR AND CABLE

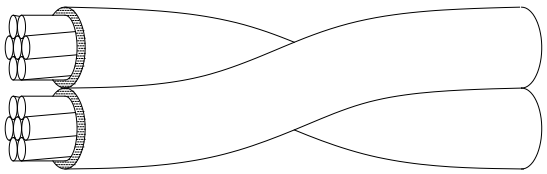

Duplex

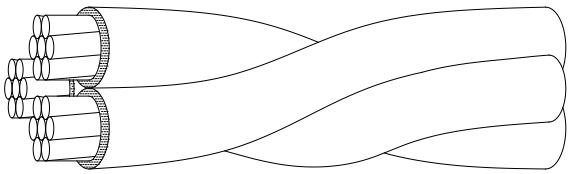

Triplex

600 V Streetlight Cable			
Description:	**Circuit Feet Per Reel**	**C/U**	**Cat ID**
600 V UG Streetlight Standard Cable			
2C #12 Cu solid (encapsulating jacket) [1]	1000	**ESCA12/2IC**	50271
1C #6 Cu str XLPE Black **(For bridge/overpass)** [2]	1000	**ESCAUSE6B**	210781
1C #4 Cu str XLPE Black **(For bridge/overpass)** [2]	1000	**ESCAUSE4B**	210780
#4 Al str Triplex XLPE (#4-#4-#4) [3]	3100	**ESCASEC4TRI**	50332
1/0 Al str Triplex XLPE reduced neutral (1/0-#2-1/0) [3]	2100	**ESCASEC1/0TRI**	67517
4/0 Al str Triplex XLPE reduced neutral (4/0-2/0-4/0) [3]	2000	**ESCASEC4/0TRI**	50334
350 MCM Al str Triplex XLPE reduced neutral (350 MCM-4/0-350 MCM) [3]	1100	**ESCASEC350TRI**	50336
600 V UG Streetlight CIC (SPS only)			
2C #10 Cu str	1000	**ESCA10/2CIC**	75112
600 V UG Streetlight Cable Maintenance Only (SPS)			
2C #10 Cu str (encapsulating jacket) [1]	1000	-	75111
600 V OH Streetlight Standard Cable			
#4 Al str Triplex XLPE (ACSR Neutral) (Periwinkle)	500	**ESCRT4**	50305
#6 Al str Duplex XLPE (ACSR Neutral) (Shepherd)	500	**ESCRD6**	105733

Notes:

1. The (2) conductors have a jacket and both the conductors and the jackets have a larger encapsulating jacket to protect the wire from damage. This is the typical conductor that is traveling through the pole/arm to the luminaire.
2. For bridges, overpasses and other in-wall applications, copper conductor should be used. Due to the space constraints and workability, copper is the preferred conductor in these applications. The #4 and the #6 are both single conductors. For duplex configurations, (2) conductor runs will be required. For triplex configurations, (3) conductor runs will be required.
3. Triplex conductor should have the luminaire load being split between the (2) “hot legs” (conductors with voltage). This is to keep the served load balanced between each conductor. The third conductor is the neutral/ground.
4. For other streetlight conductors or special applications, contact the pertinent Outdoor Lighting department.
5. If special reel lengths are needed in a streetlight application, please work with supply chain and the logistics integrator.

ODL REFERENCE
MAXIMUM DISTANCE AND LUMINAIRES PER STREETLIGHT CONDUCTOR RUN - UG FED

Maximum Conductor Distance Between Source and Last Light In Feet										
# of Lights	70 W					100 W				
	#6 Cu	#4 Cu	#2 Cu	#4 Al	1/0 Al	#6 Cu	#4 Cu	#2 Cu	#4 Al	1/0 Al
1	11536	17516	26869	11173	25843	8075	12261	18808	7821	18090
2	5768	8758	13434	5587	12922	4038	6131	9404	3911	9045
3	3845	5839	8956	3724	8614	2692	4087	6269	2607	6030
4	2884	4379	6717	2793	6461	2019	3065	4702	1955	4523
5	2307	3503	5374	2235	5169	1615	2452	3762	1564	3618
6	1923	2919	4478	1862	4307	1346	2044	3135	1304	3015
7	1648	2502	3838	1596	3692	1154	1752	2687	1117	2584
8	1442	2189	3359	1397	3230	1009	1533	2351	978	2261
9	1282	1946	2985	1241	2871	897	1362	2090	869	2010
10	1154	1752	2687	1117	2584	808	1226	1881	782	1809
12	961	1460	2239	931	2154	-	1022	1567	-	1508
15	-	1168	1791	-	1723	-	-	1254	-	1206
20	-	-	-	-	-	-	-	-	-	-

Maximum Conductor Distance Between Source and Last Light In Feet												
# of Lights	150 W						200 W					
	#6 Cu	#4 Cu	#2 Cu	#4 Al	1/0 Al	4/0 Al	#6 Cu	#4 Cu	#2 Cu	#4 Al	1/0 Al	4/0 Al
1	8972	13624	20898	8690	20100	35253	6729	10218	15674	6518	15075	26440
2	4486	6812	10449	4345	10050	17627	3365	5109	7837	3259	7538	13220
3	2991	4541	6966	2897	6700	11751	2243	3406	5225	2173	5025	8813
4	2243	3406	5225	2173	5025	8813	1682	2554	3918	1629	3769	6610
5	1794	2725	4180	1738	4020	7051	1346	2044	3135	1304	3015	5288
6	1495	2271	3483	1448	3350	5876	1122	1703	2612	1086	2513	4407
7	1282	1946	2985	1241	2871	5036	961	1460	2239	931	2154	3777
8	1122	1703	2612	1086	2513	4407	841	1277	1959	815	1884	3305
9	997	1514	2322	966	2233	3917	748	1135	1742	724	1675	2938
10	897	1362	2090	869	2010	3525	-	1022	1567	-	1508	2644
12	-	1135	1742	-	1675	2938	-	-	1306	-	1256	2203
15	598	908	1393	579	1340	2350	-	-	-	-	1005	1763
20	449	681	1045	435	1005	1763	-	-	-	-	-	1322

Notes:
1. Table assumes lights at roughly even intervals.
2. Voltage limits were based on allowable voltage drop of 3.6 V per 1000 ft. There are other practical limitations to the length of run that should be considered.
3. Values were calculated using the cable impedance values from table 9 in the NEC.
4. Lights on triplex must be alternated between legs for table to be valid.
5. For unusual spacing of lights or when table is exceeded, contact your Area Engineer for voltage drop calculation.
6. Please contact Electric Distribution Standards with any questions about the above values.

ODL REFERENCE
MAXIMUM DISTANCE AND LUMINAIRES PER STREETLIGHT CONDUCTOR RUN - UG FED

Maximum Conductor Distance Between Source and Last Light In Feet							
# of Lights	250 W						
	#6 Cu	#4 Cu	#2 Cu	#4 Al	1/0 Al	4/0 Al	350 MCM Al
1	5383	8174	12539	5214	12060	21152	29914
2	2692	4087	6269	2607	6030	10576	14957
3	1794	2725	4180	1738	4020	7051	9971
4	1346	2044	3135	1304	3015	5288	7478
5	1077	1635	2508	1043	2412	4230	5983
6	897	1362	2090	869	2010	3525	4986
7	769	1168	1791	745	1723	3022	4273
8	673	1022	1567	652	1508	2644	3739
9	598	908	1393	579	1340	2350	3324
10	-	817	1254	-	1206	2115	2991
12	-	-	1045	-	1005	1763	2493
15	-	-	-	-	-	1410	1994
20	-	-	-	-	-	-	1496

Maximum Conductor Distance Between Source and Last Light In Feet							
# of Lights	400 W						
	#6 Cu	#4 Cu	#2 Cu	#4 Al	1/0 Al	4/0 Al	350 MCM Al
1	3365	5109	7837	3259	7538	13220	18696
2	1682	2554	3918	1629	3769	6610	9348
3	1122	1703	2612	1086	2513	4407	6232
4	841	1277	1959	815	1884	3305	4674
5	673	1022	1567	652	1508	2644	3739
6	561	851	1306	543	1256	2203	3116
7	481	730	1120	466	1077	1889	2671
8	-	639	980	-	942	1652	2337
9	-	568	871	-	838	1469	2077
10	-	-	784	-	754	1322	1870
12	-	-	-	-	-	1102	1558
15	-	-	-	-	-	-	1246
20	-	-	-	-	-	-	-

Notes:
1. Table assumes lights at roughly even intervals.
2. Voltage limits were based on allowable voltage drop of 3.6 V per 1000 ft. There are other practical limitations to the length of run that should be considered.
3. Values were calculated using the cable impedance values from table 9 in the NEC.
4. Lights on triplex must be alternated between legs for table to be valid.
5. For unusual spacing of lights or when table is exceeded, contact your Area Engineer for voltage drop calculation.
6. Please contact Electric Distribution Standards with any questions about the above values.

ODL REFERENCE
MAXIMUM DISTANCE AND LUMINAIRES PER STREETLIGHT CONDUCTOR RUN - UG FED

Maximum Conductor Distance Between Source and Last Light In Feet							
# of Lights	1000 W						
	#6 Cu	#4 Cu	#2 Cu	#4 Al	1/0 Al	4/0 Al	350 MCM Al
1	2692	4087	6269	2607	6030	10576	14957
2	1346	2044	3135	1304	3015	5288	7478
3	897	1362	2090	869	2010	3525	4986
4	673	1022	1567	652	1508	2644	3739
5	538	817	1254	521	1206	2115	2991
6	449	681	1045	435	1005	1763	2493
7	-	584	896	-	861	1511	2137
8	-	-	784	-	754	1322	1870
9	-	-	697	-	670	1175	1662
10	-	-	-	-	-	1058	1496
12	-	-	-	-	-	881	1246
15	-	-	-	-	-	-	-
20	-	-	-	-	-	-	-

Notes:
1. Table assumes lights at roughly even intervals.
2. Voltage limits were based on allowable voltage drop of 3.6 V per 1000 ft. There are other practical limitations to the length of run that should be considered.
3. Values were calculated using the cable impedance values from table 9 in the NEC.
4. Lights on triplex must be alternated between legs for table to be valid.
5. For unusual spacing of lights or when table is exceeded, contact your Area Engineer for voltage drop calculation.
6. Please contact Electric Distribution Standards with any questions about the above values.

ODL REFERENCE
MAXIMUM DISTANCE AND LUMINAIRES PER STREETLIGHT CONDUCTOR RUN - OH FED

Maximum Conductor Distance Between Source and Last Light In Feet												
# of Lights	70 W		100 W		150 W		250 W		400 W		1000 W	
	#6 Al	#4 Al	#6 Al	#4 Al	#6 Al	#4 Al	#6 Al	#4 Al	#6 Al	#4 Al	#6 Al	#4 Al
1	12298	18327	8608	12829	5739	8553	4304	6415	3443	5132	2152	3207
2	6149	9164	4304	6415	2869	4276	2152	3207	1722	2566	1076	1604
3	4099	6109	2869	4276	1913	2851	1435	2138	1148	1711	717	1069
4	3074	4582	2152	3207	1435	2138	1076	1604	861	1283	538	802
5	2460	3665	1722	2566	1148	1711	861	1283	689	1026	430	641
6	2050	3055	1435	2138	956	1425	717	1069	574	855	359	535
7	1757	2618	1230	1833	820	1222	615	916	492	733	-	458
8	1537	2291	1076	1604	717	1069	538	802	-	641	-	-
9	1366	2036	956	1425	638	950	-	713	-	570	-	-
10	1230	1833	861	1283	-	855	-	-	-	-	-	-
12	1025	1527	-	1069	-	713	-	-	-	-	-	-
15	-	1222	-	-	-	-	-	-	-	-	-	-
20	-	-	-	-	-	-	-	-	-	-	-	-

Notes:
1. Table assumes lights at roughly even intervals.
2. Voltage limits were based on allowable voltage drop of 3.6 V per 1000 ft. There are other practical limitations to the length of run that should be considered.
3. Values were calculated using the cable impedance values from table 9 in the NEC.
4. Lights on triplex must be alternated between legs for table to be valid.
5. For unusual spacing of lights or when table is exceeded, contact your Area Engineer for voltage drop calculation.
6. Please contact Electric Distribution Standards with any questions about the above values.

ODL REFERENCE
CONDUCTOR IMPEDANCES

Underground Conductors (Ω/1000 ft)							
Conductor	**#6 Cu**	**#4 Cu**	**#2 Cu**	**#4 Al**	**1/0 Al**	**4/0 Al**	**350 MCM Al**
Reactance (X)	0.051	0.048	0.045	0.048	0.044	0.041	0.045
Resistance (R)	0.490	0.310	0.190	0.510	0.200	0.100	0.190
Overhead Conductors (Ω/1000 ft)							
Conductor	**#6 Al**	**#4 Al**					
Reactance (X)	2.221	1.398					
Resistance (R)	0.677	0.426					

Notes:
1. The given Reactance is at 25° C.
2. The impedance values are for conductors that are approved for construction at Xcel Energy.
3. To calculate Voltage drop you must first obtain connected load information for the circuit.
4. Please contact your Area Engineer for voltage drop calculations.

ODL REFERENCE
INDIVIDUAL STREETLIGHT FUSE SIZING
UNDERGROUND FED STREETLIGHTS

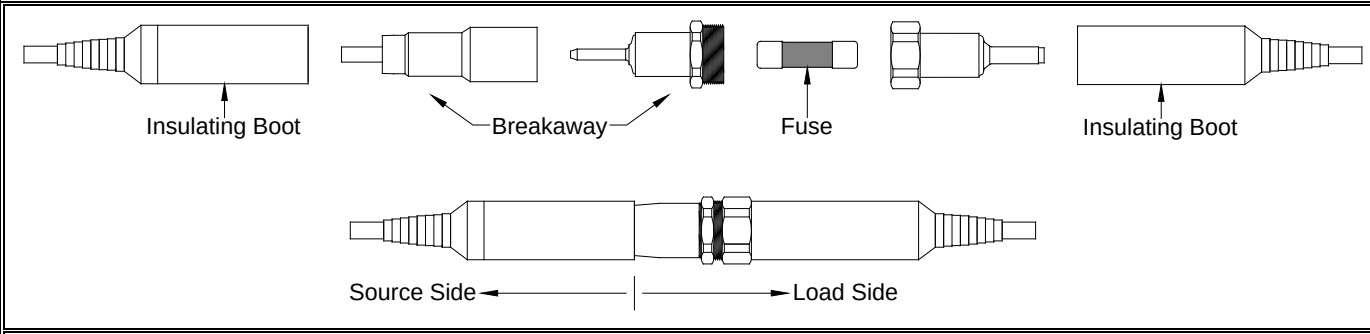

Individual streetlight fusing in pole			
Description:	**Max Interrupting Capability**	**C/U**	**Cat ID**
Fuse Holder (Load Side Breakaway type)			
#12 to #8 Wire Cu or Al, 250 V, includes insulating boots, C/U includes 20 A fuse	750 A	**ESFUSEHDR**	**53117**
Fuse Only			
Fuse, 20 A, 250 V (compatible with Streetlight Handhole Fuse Holder)	750 A	**-**	**53308**
Fuse, 30 A, 250 V (compatible with Streetlight Handhole Fuse Holder)	750 A	**-**	**53309**

Notes:
1. Individual Streetlights should be fused inside the hand hole. See page ODL CONST-J.20.
2. Streetlights with dual luminaires should have each luminaire fused separately in the hand hole. See page ODL CONST-J.10.
3. The Streetlight circuit should be fused at the source. For current limiting fusing at the transformer or the pedestal, see page ODL REF-2.60.
4. For Overhead to Underground streetlights, use flag indicator fuses before the underground transition. This is for streetlight circuits only. If there is any distribution off of the circuit, fuse at the pedestal. See page ODL REF-2.70 for flag indicator fuses.

Streetlight HPS Luminaire Wattage	Starting Current (A)	Operating Current (A)	Minimum Fuse Size (A)
70 W Normal power factor	2.10	2.10	10
100 W Normal power factor	3.10	2.15	10
150 W Normal power factor	4.50	3.30	15
200 W High power factor	0.80	2.20	10
250 W High power factor	1.80	2.80	15
400 W High power factor	2.80	3.90	20
1000 W High power factor	6.40	9.40	20

ODL REFERENCE
PEDESTAL AND TRANSFORMER
STREETLIGHT CIRCUIT CURRENT LIMITING FUSING
UNDERGROUND FED STREETLIGHT CIRCUIT

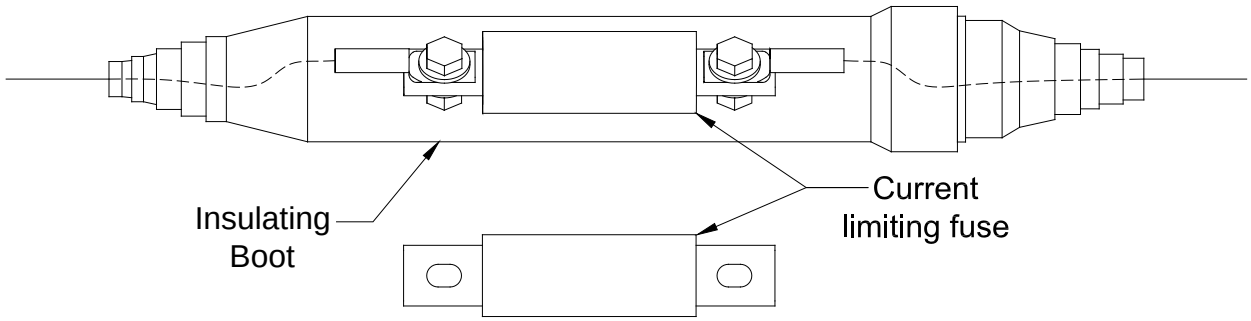

Transformer and Pedestal Streetlight Current Limiting Fuse			
Description:	**Interrupting Rating**	**C/U**	**Cat ID**
Current Limiter for Streetlight Circuit Fits #8-500 MCM Cable, rated 600 V			
#6 Cu and #4 Al kit, comes with (2) #6 Cu & #4 Al to 1-hole pad lugs,(2) bolts, (2) nuts, (2) lock washers, (4) flat washers, and (1) 90 A current limiter fuse [1]	200,000 A	**ESFC90A6CU**	**53149** (kit only)
(2) #4 Cu to 1-hole pad lug, (C/U contains #4 Al kit) [1, 4]	200,000 A	**ESFC90A4CU**	**50699** (lug only)
(2) 1/0 Al to 1-hole pad lug, (C/U contains #4 Al kit) [1, 4]	200,000 A	**ESFC90A1/0AL**	**107250** (lug only)
(2) 4/0 Al to 1-hole pad lug, (C/U contains #4 Al kit) [1, 4]	200,000 A	**ESFC90A4/0AL**	**76742** (lug only)
Current Limiter Fuse Only			
Fuse, 70 A, 600 V, (use for streetlight branch circuits)	200,000 A	**-**	**53681** (fuse only)
Fuse, 90 A, 600 V, Pedestal/Transformer	200,000 A	**-**	**53682** (fuse only)

Notes:

1. Streetlight circuit fuse C/U comes complete with current limiter fuse, lugs, hardware, and insulating boot. Fuse inside upright pedestal. If not possible, fusing inside a transformer is acceptable. Fuse only streetlight circuit; do not fuse any distribution circuit. Select the right lugs and discard the wrong size lugs.
2. Individual Streetlights should be fused inside the hand hole. See pages ODL CONST-J.10 and ODL CONST-J.20.
3. For Overhead to Underground streetlights, use flag indicator fuses before the underground transition. This is for streetlight circuits only. If there is any distribution off of the circuit, fuse at the pedestal. See page ODL REF-2.70 for flag indicator fuses.
4. The C/U contains the #4 Al kit and the appropriate sized lugs for the conductor. Discard the #4 Al lugs in the kit and use the appropriate sized lugs for the streetlight circuit conductor. If only the lugs are needed, use the Cat ID rather than the C/U to order.

ODL REFERENCE
FLAG INDICATOR FUSE SIZING
OVERHEAD TO UNDERGROUND FED STREETLIGHT CIRCUIT

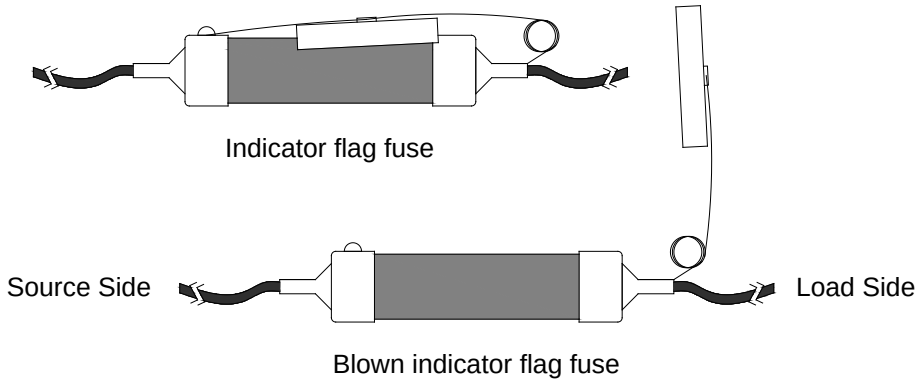

Overhead to Underground Flag Indicator Fusing		
Description:	**C/U**	**Cat ID**
Flag Indicator Fuse		
40 A, up to 480 V (for streetlight circuit having (4) or fewer streetlights)	**ESFUIDC40**	**53567**
75 A, up to 480 V	**ESFUIDC75**	**53569**
100 A, up to 480 V	**ESFUIDC100**	**53570**

Notes:
1. As long as there is no other distribution attached to the secondary circuit, you can use the flag indicator fuse for the streetlight only circuit. Flag Indicator Fuse are ONLY used on streetlight circuits. The Flag Indicator Fuse configuration is found on page ODL CONST-J.60.
2. If there is any other distribution attached to the secondary circuit, fuse the streetlight circuit at the pedestal with a current limiting fuse. For current limiting fusing at either the pedestal or the transformer, see page ODL REF-2.60.
3. Individual Streetlights should be fused inside the handhole. See page ODL REF-2.50 for fuses and ODL CONST-J.20 for physical installation.

ODL REFERENCE
TERMINATION BLOCKS

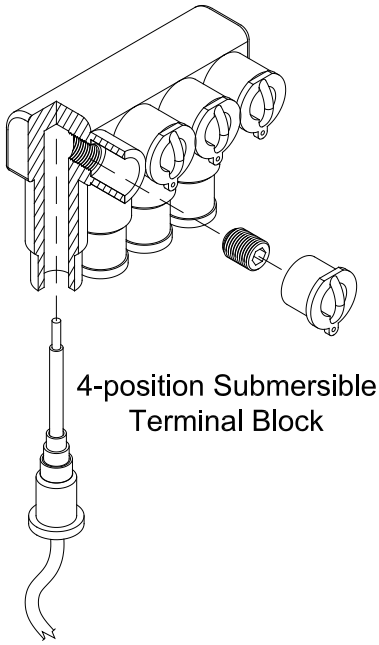

4-position Submersible Terminal Block

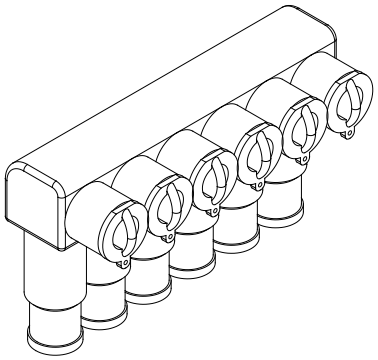

6-position Submersible Terminal Block

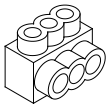

3-position Non-Submersible Terminal Block

Termination Block		
Description: Submersible, above or below ground	**C/U**	**Cat ID**
Terminal Block, 4-position, Submersible, #12 - 350 MCM, Cu/Al [1, 2, 5]	**ESCN4TERMBLOCKA**	51141
Terminal Block, 6-position, Submersible, #12 - 350 MCM, Cu/Al[1, 2, 5]	**ESCN6TERMBLOCKA**	51145
Description: Non-submersible, above ground only		
Terminal Block, 3-position, Non-submersible #14 - #4 Cu/Al [3, 4, 5]	**ESCN3TERMNS**	106435

Notes:

1. Submersible terminal blocks are suitable for above and below ground applications when properly installed. Cable should fit through the boot tightly and silicone lubricant is used to help feed the cable into the boot.
2. On submersible terminal blocks, watertight boot must be cut to fit the size of conductor. If the wrong size is cut and the cable is too loose, water will seep into the connector, causing corrosion and eventual failure.
3. Non-submersible connectors are only suitable in above ground applications such as ceiling or wall pack luminaire installations where water ingress is highly unlikely. Not recommended for secondary pedestal or transformer use. The connector is useful when repairing legacy systems where the connection was made above ground in a pole handhole; these smaller connectors are recommended due to space constraints.
4. Non-submersible terminal blocks should be positioned to reduce the chance of moisture collecting in the connector. The open ports where the cable is installed should face down. If the ports are facing up, this will allow water to collect in the terminal block, causing corrosion, and eventual failure.
5. Both Submersible and non-submersible connectors are suitable for bi-metal applications and can be used with the appropriate sized Aluminum or Copper conductor.

ODL REFERENCE
STREETLIGHT CONDUIT AND FITTINGS

HDPE Conduit for Streetlights			
Description:	**C/U**	**Cat ID**	**Color**
Standard Offering			
Conduit, streetlighting, 1”, Red, HDPE (SPS only)	**ESCDCONDSL1**	82622	Red
Conduit, streetlighting, 1-1/2”, Red, HDPE (NSPM only)	**ESCDCONDSL**	106639	Red
Conduit, streetlighting, 2”, Red, HDPE	**ESCDCONDSL2**	209244	Red
Conduit, streetlighting, 4”, Red, HDPE	**ESCDCONDSL4**	219892	Red
Conduit, streetlighting, 1-1/2” Flex-pipe (NSPM only)	**ESCDCONDEXT**	99491	Grey
Conduit, streetlighting, 2” Flex-pipe	**ESCDCONDEXT2**	99492	Grey

Conduit fittings for Streetlights			
Description:	**C/U**	**Cat ID**	**Color**
Standard Offering			
1-1/2” Coupling HDPE to PVC/Flex-Pipe/HDPE (NSPM only)	**EUCDCREPFLX-1.5**	52078	-
2” Coupling HDPE to PVC/Flex-Pipe/HDPE	**EUCDCELOK-2**	52077	-
4” Coupling HDPE to PVC/Flex-Pipe/HDPE	**EUCDCELOK-4**	52081	

Notes:
1. All streetlight circuits should be in conduit.
2. The streetlight HDPE conduit is colored solid red to distinguish it from other conduits in the ground.
3. For other conduit accessories (e.g., elbows, couplers, etc.), see Underground Manual, Section-U, pages U-B and U-C.
4. Grey flex conduit shall only be installed from the pullbox to and up through the streetlight foundation to the base of the pole. Please see page ODL CONST-G.70 for proper installation.

ODL REFERENCE
TRACER WIRE GUIDANCE

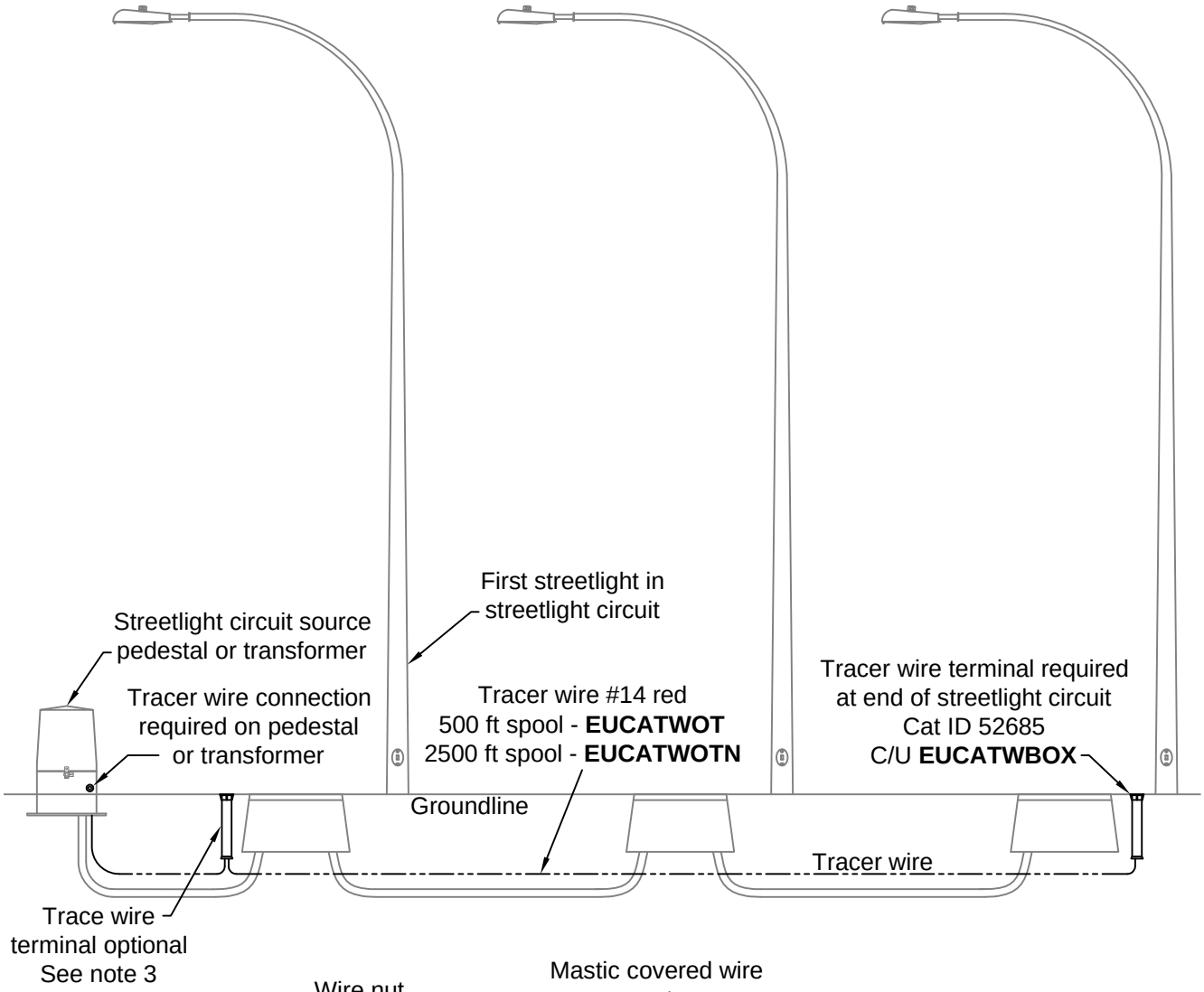

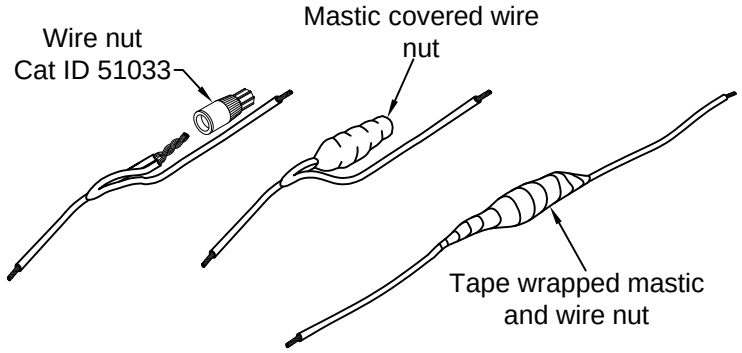

Notes:

1. Tracer wire terminal should be installed at the end of the streetlight circuit. It is not needed at every pullbox.
2. The pedestal or transformer has a tracer wire attachment point.
3. A tracer wire terminal can be installed at the beginning of the streetlight circuit if the source pedestal or source transformer is not visible from the first streetlight in the streetlight circuit.
4. See Underground Manual page M-4 for tracer wire details.

ODL REFERENCE
CONCRETE FOUNDATION

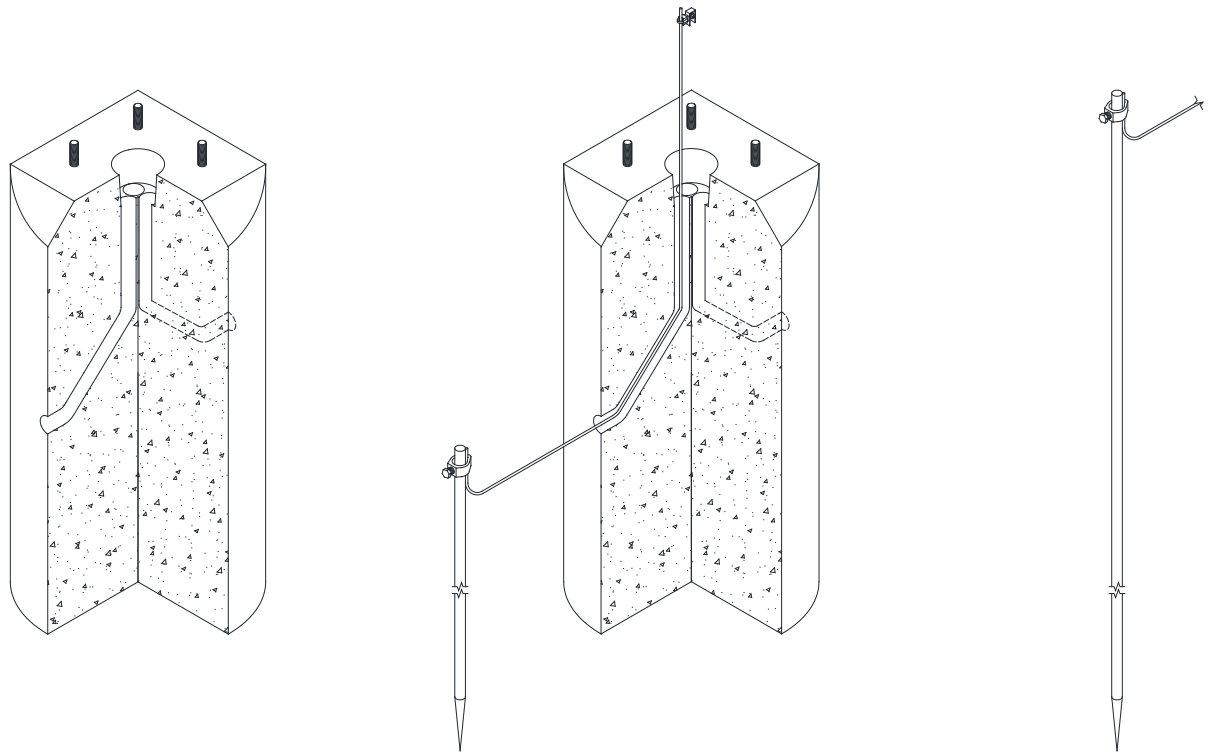

Description:	C/U	Cat ID	Weight (lbs)
Foundation - Suitable for use on all steel, aluminum, fiberglass and concrete poles	Direct buried fiberglass poles do not need a foundation or a pole ground (see note 5)		
Foundation - Concrete 24” D x 48” H x 12” BC x 1” anchor bolts Foundation Only	**ESFD2448121N**	54541	1850
Ground Rod, Ground Rod Connector, #4 Cu wire, and Handhole Connector Only	**ESGRD**	51423	-

Notes:
1. All metal and concrete poles need to have a ground rod installed for grounding.
2. Grounding plate is at the back of the pole handhole.
3. Do not leave ground wire exposed. Run ground up through foundation.
4. 12” bolt circle (BC) foundation will accommodate breakaway transformer base (T-base).
5. NESC requirement of a minimum of 4 grounds per mile must still be satisfied in design.

ODL REFERENCE
STEEL HELIX FOUNDATION

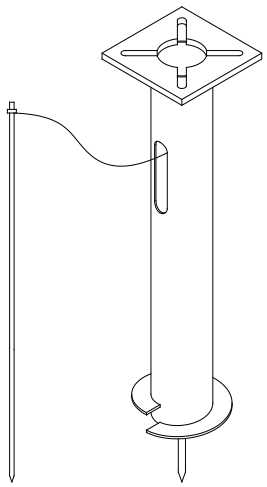

Description:	C/U	Cat ID	Weight (lbs)
Foundation - Suitable for use on all steel, aluminum, fiberglass and concrete poles	Direct buried fiberglass poles do not need a foundation or a pole ground (see note 5)		
Steel Helix Foundation, 1” Anchor bolts, range of 8-3/4” BC to 17” BC with hardware kit Suitable for poles 30 ft in height or less for clay soil conditions.	**ESPMPABSLL**	106592	175
Steel Helix Foundation, 3/4” Anchor bolts, range of 7” BC to 15” BC with hardware kit Suitable for poles 20 ft in height or less for clay soil conditions.	**ESPMPABSL**	209095	154
For poles taller than 30 ft in height, contact Electric Distribution Standards			
Ground Rod, Ground Rod Connector, #4 Cu wire, and Handhole Connector Only	**ESGRD**	51423	-

Notes:
1. All metal and concrete poles need to have a ground rod installed for grounding.
2. Grounding plate is at the back of the pole handhole.
3. Do not leave ground wire exposed. Run ground up through foundation.
4. Metal Helix foundation will accommodate breakaway bolts. See ODL CONST-C.40 for installation guidance.
5. NESC requirement of a minimum of 4 grounds per mile must still be satisfied in design.
6. Do not install metal helix foundations in areas with highly acidic or corrosive soils.
7. Do not install metal helix foundations in rocky soil conditions. A precast concrete foundation or pour-in-place concrete foundation is preferred for rocky soil conditions.

ODL REFERENCE
BREAKAWAY SUPPORT - TRANSFORMER BASE (T-BASE)

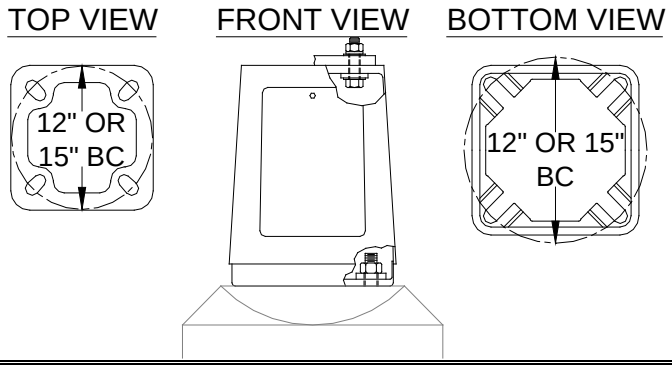

Description:	C/U	Cat ID	Color
Breakaway Base: Aluminum 12” BC top, 12” BC bottom	**ESBS12X12BRK**	54519	Grey
Breakaway Base: Aluminum 12” BC top, 15” BC bottom	**ESBS12X15BRK**	54518	Grey
Breakaway Base: Aluminum 15” BC top, 15” BC bottom	**ESBS15X15BRK**	54521	Grey

DO NOT use with 30 ft, 35 ft or 40 ft <u>double arm</u> poles. If breakaway bases are requested for 30 ft, 35 ft or 40 ft <u>double arm</u> poles, contact Electric Distribution Standards.

Check to see if the breakaway base is appropriate for your project. This will be determined by the governing authority such as the state highway department, municipality, and/or Xcel Energy. It is important that the use of the breakaway base does not introduce a greater hazard. Here is some general guidance for the use of a breakaway (frangible) base.

The purpose of a breakaway base is to provide protection to vehicle occupants in the event of a collision with a streetlight standard. Here are some situations where the application of a breakaway base should be questioned:

1. For posted speeds of 40 mph or less and located 10 ft or more from the travel roadway, the streetlight standard **may be** installed on a non-breakaway support.
2. For posted speeds of 40 mph or less and behind a vehicular barrier, a streetlight standard **may be** installed on a non breakaway support. (Example barriers include: crash barriers, concrete barriers, etc.)
3. Breakaway supports **should not** be used in urban areas where a falling streetlight standard could strike a pedestrian or cause property damage.
4. Breakaway supports **should not** be used on streetlight standards when located in road medians, due to the increased risk posed to opposing traffic.
5. Streetlight standards located a minimum of 30 ft from the traveled way **may not require** breakaway supports.
6. Streetlight standards located behind guardrails **may not require** breakaway supports.

<u>Notes</u>:

1. The Bolt Circle (BC) on the bottom of the breakaway T-base is where it bolts to the foundation and the Bolt Circle (BC) on the top is where it bolts to the pole.
2. No extra bolts are needed to use the breakaway base. The breakaway base includes the necessary nuts, washers, and bolts to attach to the pole.

ODL REFERENCE
BREAKAWAY SUPPORT - BREAKAWAY BOLTS

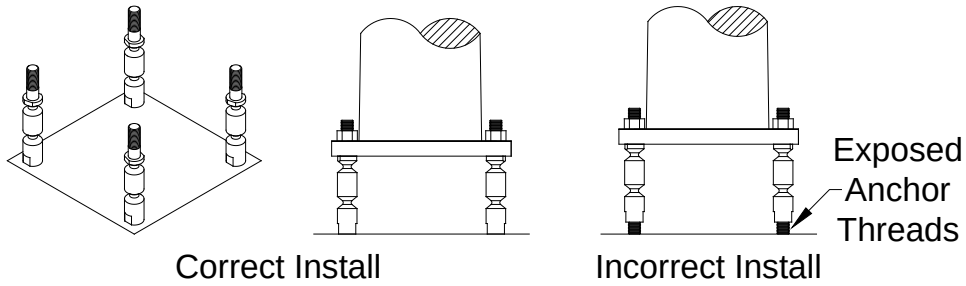

Description:	C/U	Cat ID	Color
Breakaway Bolts: Steel, for 1” Dia Bolts, Cat ID provides a Qty “4” breakaway bolts	**ESPMBKAWAY**	106587	Grey

DO NOT use with 30 ft, 35 ft or 40 ft <u>double arm</u> poles. If breakaway bolts are requested for 30 ft, 35 ft or 40 ft <u>double arm</u> poles, contact Electric Distribution Standards.

Check to see if breakaway bolts are appropriate for your project. This will be determined by the governing authority such as the state highway department, municipality, and/or Xcel Energy. It is important that the use of the breakaway bolts does not introduce a greater hazard. Here is some general guidance for the use of breakaway (frangible) bolts.

The purpose of breakaway bolts is to provide protection to vehicle occupants in the event of a collision with a streetlight standard. Here are some situations where the application of breakaway bolts should be questioned:

1. For posted speeds of 40 mph or less and located 10 ft or more from the travel roadway, the streetlight standard **may be** installed on a non-breakaway support.
2. For posted speeds of 40 mph or less and behind a vehicular barrier, a streetlight standard **may be** installed on a non-breakaway support. (Example barriers include: crash barriers, concrete barriers, etc.)
3. Breakaway supports **should not** be used in urban areas where a falling streetlight standard could strike a pedestrian or cause property damage.
4. Breakaway supports **should not** be used on streetlight standards when located in road medians, due to the increased risk posed to opposing traffic.
5. Streetlight standards located a minimum of 30 ft from the traveled way **may not require** breakaway supports.
6. Streetlight standards located behind guardrails **may not require** breakaway supports.

<u>Notes</u>:

1. The breakaway bolt must be snug against the foundation without any of the anchor bolt exposed. If the anchor bolt is not covered by the breakaway bolt, it may not operate properly. The use of a slip plate may be necessary if the breakaway bolt does not sit flush against the foundation.
2. No extra bolts are needed to use the breakaway bolts. The breakaway bolts include the necessary nuts, washers, and bolts to attach to the pole.

ODL REFERENCE
BREAKAWAY SUPPORT - BREAKAWAY BOLTS
SAFETY BASE

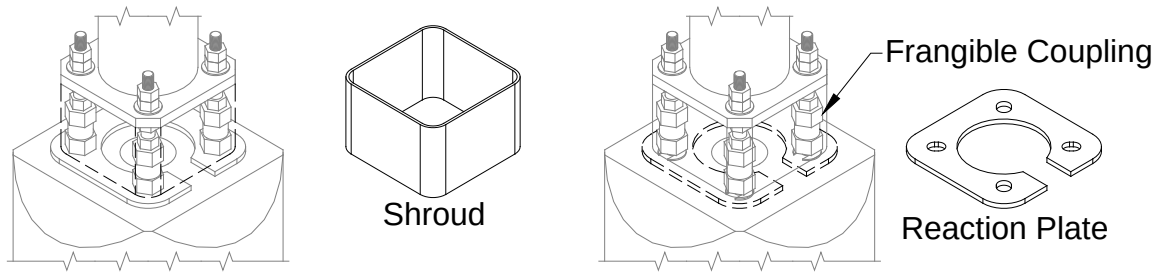

Description:	C/U	Cat ID	Color
Base includes coupler kit, shroud and reaction plate	**ESPMBKAWAYS**	221152	Grey

Check to see if breakaway bolts are appropriate for your project. This will be determined by the governing authority such as the state highway department, municipality, and/or Xcel Energy. It is important that the use of the safety base does not introduce a greater hazard. Here is some general guidance for the use of breakaway (frangible) bolts.

The purpose of breakaway bolts is to provide protection to vehicle occupants in the event of a collision with a streetlight pole. Here are some situations where the application of breakaway bolts should be questioned:

1. For posted speeds of 40 mph or less and located 10 ft or more from the travel roadway, the streetlight standard **may be** installed on a non-breakaway support.
2. For posted speeds of 40 mph or less and behind a vehicular barrier, a streetlight standard **may be** installed on a non-breakaway support. (Example barriers include: crash barriers, concrete barriers, etc.)
3. Breakaway supports **should not** be used in urban areas where a falling streetlight standard could strike a pedestrian or cause property damage.
4. Breakaway supports **should not** be used on streetlight standards when located in road medians, due to the increased risk posed to opposing traffic.
5. Streetlight standards located a minimum of 30 ft from the traveled way **may not require** breakaway supports.
6. Streetlight standards located behind guardrails **may not require** breakaway supports.

Notes:

1. The breakaway bolt must be snug against the foundation without any of the anchor bolt exposed. If the anchor bolt is not covered by the breakaway bolt, it may not operate properly. The use of a reaction plate may be necessary if the breakaway bolt does not sit flush against the foundation.
2. No extra bolts are needed to use the breakaway bolts. The Safety base kit includes tall the necessary hardware and material needed to attach the pole.

ODL REFERENCE
NON-BREAKAWAY TRANSFORMER BASE (T-BASE)

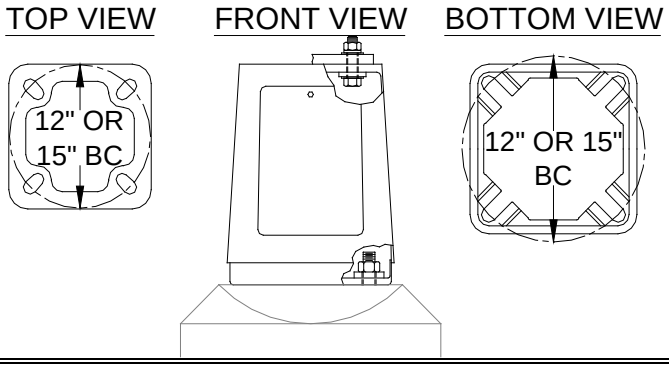

Description:	C/U	Cat ID	Color
Non-Breakaway Base: Steel 12” BC top, 12” BC bottom	**ESBS12X12**	54231	Galvanized
Non-Breakaway Base: Steel 12” BC top, 15” BC bottom	**ESBS12X15**	54230	Galvanized
Non-Breakaway Base: Steel 15” BC top, 15” BC bottom	**ESBS15X15**	69782	Galvanized

Notes:
1. None of these transformer bases are breakaway bases. For breakaway base application please see ODL REF- 4.20 and ODL REF- 4.30.
2. Non-Breakaway transformer bases shall only be used when the use of pullboxes is impossible please contact EDS for further guidance on the use of T-bases.
3. The Bolt Circle (BC) on the bottom of the non-breakaway T-base is where it bolts to the foundation and the Bolt Circle (BC) on the top is where it bolts to the pole.

ODL REFERENCE
STREETLIGHT RELAY

Streetlight Relay			
Description:	**C/U**	**Cat ID**	**Color**
Relay, for streetlight control, Normal Open, Single-Pole/Single-Throw (SPST), 60 A, 120 V, no photo control receptacle, NEMA 4 enclosure	**ESERNP60A120**	54342	Grey
Relay, for streetlight control, Normal Open, Single-Pole/Single-Throw (SPST), 60 A, 120/240 V, photo control receptacle included, NEMA 4 enclosure	**ESER60A120/240**	54343	Grey
Relay, streetlight control, Normal Open, Double-Pole/Double-Throw (DPDT), 60 A, 208-240 V, photo control receptacle included, NEMA 4 enclosure	**ESER60A240**	77014	Grey

Relays are used when controlling multiple luminaires from the same control location. Photo controls have Watt and Volt-Ampere limitations. Using a relay with a photo control will enable a larger number of luminaires to be controlled from one central location.

Location of the relay is critical for correct luminaire operation. When a group of luminaires is to be controlled under a bridge or overpass, the relay must be located where it can receive sunlight. If the relay is located under a bridge or overpass in the shade, the photo control will not sense the sunlight and lights will burn for an extended period of time.

If a standard luminaire with a photo control receptacle is present, place a shorting cap in the photo control receptacle. This will allow the relay to control the luminaires from one central location. By using a shorting cap, this allows the luminaire to stay on all the time and the relay will determine when the luminaire will be turned on or turned off.

Recommended Number of HPS Luminaires that can be connected to each 60 A Relay							
Wattage of Luminaire	**70W**	**100 W**	**150 W**	**200 W**	**250 W**	**400 W**	**1000 W**
Normal Power Factor Reactor ballast [2, 3]	37	28	18	-	-	-	-
High Power Factor Reactor ballast [1, 3]	66	50	33	-	-	-	-
High Power Factor CWA Ballast [1, 3]	-	-	-	25	20	12	5

Notes:
1. High power factor ballast luminaires typically range from 0.75 - 0.95 pF.
2. Normal power factor ballast luminaire typically range from 0.45 - 0.55 pF.
3. Xcel Energy uses Normal pF ballasts for luminaires 150 W and below and High pF ballasts for luminaires 200 W and above.

ODL REFERENCE
BRIDGE AND OVERPASS CONSTRUCTION

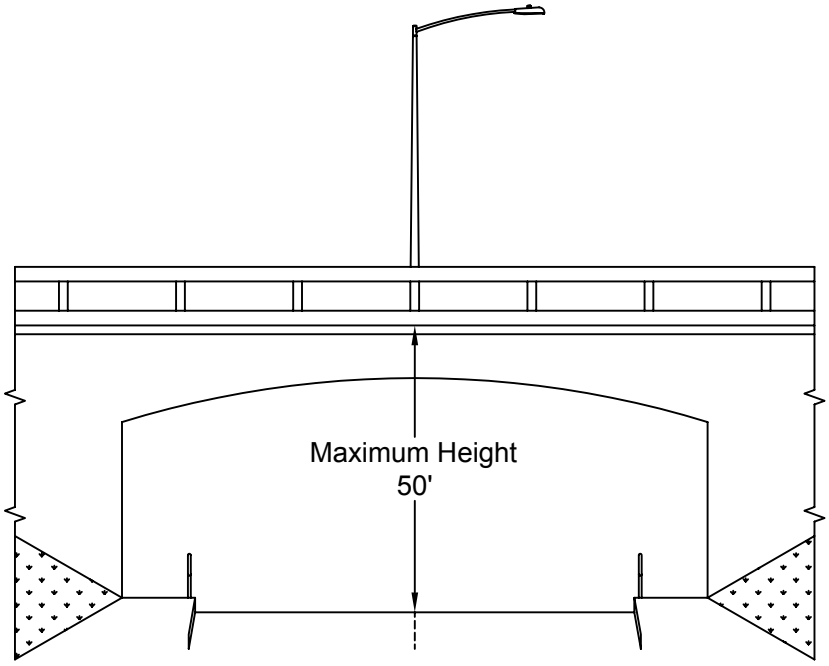

Bridge

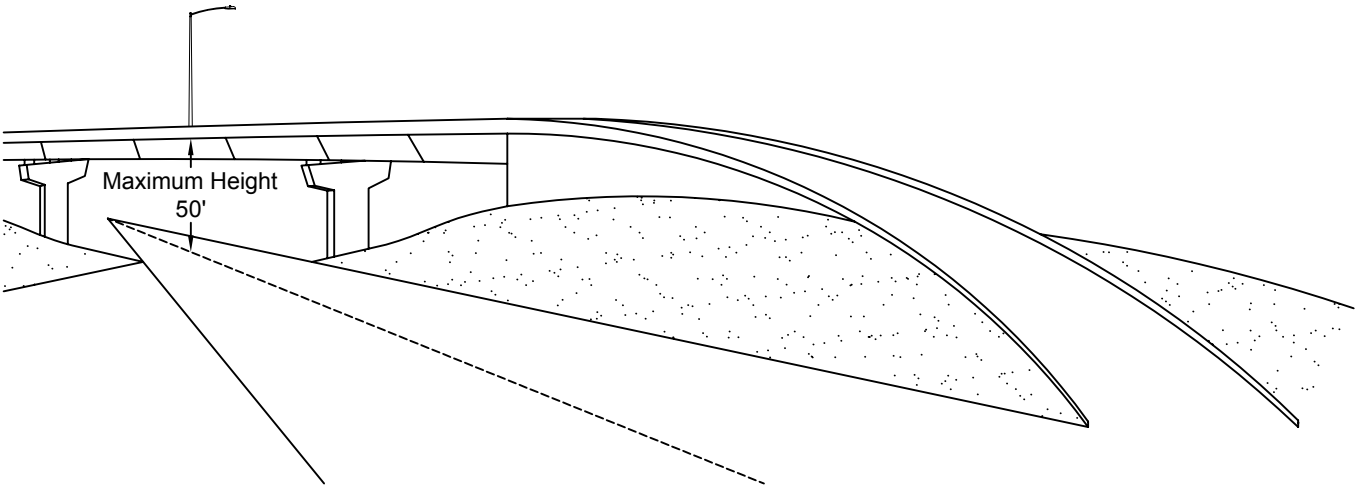

Overpass

Notes:

1. For bridges and overpasses, the height limit is 50 ft from the ground to the base of the streetlight pole.
2. The standard pole can only be a single arm pole. The arm can be 10 ft long or less.
3. The standard pole will satisfy the AASHTO loading criteria for poles mounted in elevated position at a maximum of 50 ft with a single arm. This is due to the pole not having the extra weight (lbs) and Effective Projected Area (EPA) from a second luminaire. If a pole is needed on a bridge or overpass that exceeds the 50 ft height restriction or if double arms are required, contact EDS for guidance.

ELECTRIC DISTRIBUTION DESIGN AND CONSTRUCTION STANDARDS

OUTDOOR LIGHTING

ODL CONSTRUCTION

ODL CONSTRUCTION
INDEX

TITLE	PAGE
Streetlight Visual Index	ODL CONST-A.00
Luminaire	
HID Luminaire	ODL CONST-B.00
LED Luminaire	ODL CONST-B.02
Vandal Shields	ODL CONST-B.04
Vandal Shields	ODL CONST-B.06
High Pressure Sodium Ballasts	ODL CONST-B.10
High Pressure Sodium Lamps	ODL CONST-B.20
Metal Halide and Mercury Vapor Lamps	ODL CONST-B.25
Starters	ODL CONST-B.30
Photocontrols	ODL CONST-B.40
Photocontrol Receptacles	ODL CONST-B.50
Photocontrol Receptacles - 7-Pin	ODL CONST-B.70
Photocontrol Receptacle - Power Tap Adapter	ODL CONST-B.80
Pole	
Tenon Top Interface	ODL CONST-C.20
Installation For Streetlight Foundation and Pullbox	ODL CONST-C.30
Concrete Foundation Compaction Guidelines	ODL CONST-C.35
Leveling Poles on Precast Concrete Foundations	ODL CONST-C.37
Concrete Foundation Risers	ODL CONST-C.38
Breakaway Support	ODL CONST-C.40
Breakaway Support - Safety Base	ODL CONST-C.45
Streetlight Pole Labels	ODL CONST-C.60
Streetlight Pole Label - PSCo	ODL CONST-C.65
Traffic Signal Example Drawing	ODL CONST-C.80
Pullbox	
Pullbox Details for Duplex and Triplex Cable	ODL CONST-G.00
Roadway Lighting Layout and Streetlight Handhole Placement	ODL CONST-G.10
Pullbox Placement Guide	ODL CONST-G.20
Streetlight and Traffic Circuit Layout	ODL CONST-G.25
Wiring 120 V and Neutral for Duplex and Triplex	ODL CONST-G.30
Pullbox Installation Arrangement	ODL CONST-G.40
Pullbox Grounding Installation	ODL CONST-G.50
Conduit Repair Instructions	ODL CONST-G.60
Conduit Application	ODL CONST-G.70
Wall and Ceiling Junction Box Details	ODL CONST-G.80

ODL CONSTRUCTION
INDEX

Electrical Wiring and Related Components for Streetlighting

Streetlight Circuit Layout	ODL CONST-J.00
Streetlight Wiring with Luminaire	ODL CONST-J.10
Pole Handhole Details	ODL CONST-J.20
Fuse and Terminal Block Connection Guide	ODL CONST-J.30
Duplex Padmount Transformer Streetlight Feed	ODL CONST-J.40
Triplex Padmount Transformer Streetlight Feed	ODL CONST-J.45
Duplex Pedestal Streetlight Feed	ODL CONST-J.50
Triplex Pedestal Streetlight Feed	ODL CONST-J.55
Overhead to Underground Streetlight Feed	ODL CONST-J.60
Streetlight Relay	ODL CONST-J.70
Streetlight Horizontal Clearance	ODL CONST-J.80
Streetlight Vertical Clearance	ODL CONST-J.90
Wall and Ceiling Luminaire Installation	ODL CONST-J.100
Wall and Ceiling Luminaire and Relay Box Placement	ODL CONST-J.110

Grounding

Streetlight Pole Grounding - Internal Lug	ODL CONST-K.00
Concrete Streetlight Foundation - Internal Ground Connection	ODL CONST-K.10
Luminaire and Mast Arm Grounding	ODL CONST-K.20
Streetlight Circuit Grounding	ODL CONST-K.30

ODL CONSTRUCTION
STREETLIGHT VISUAL INDEX

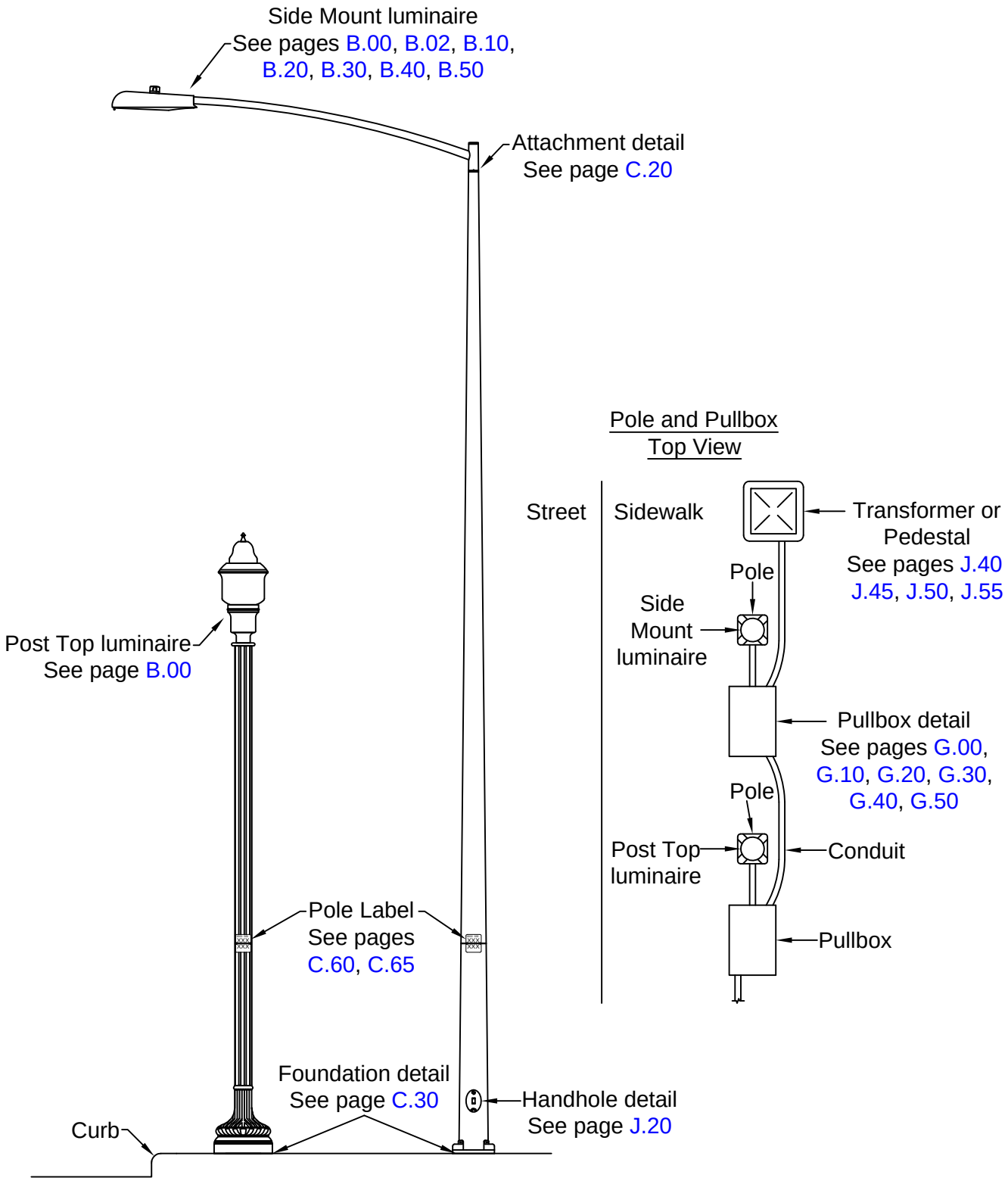

ODL CONSTRUCTION
HID LUMINAIRE COMPONENT DETAILS

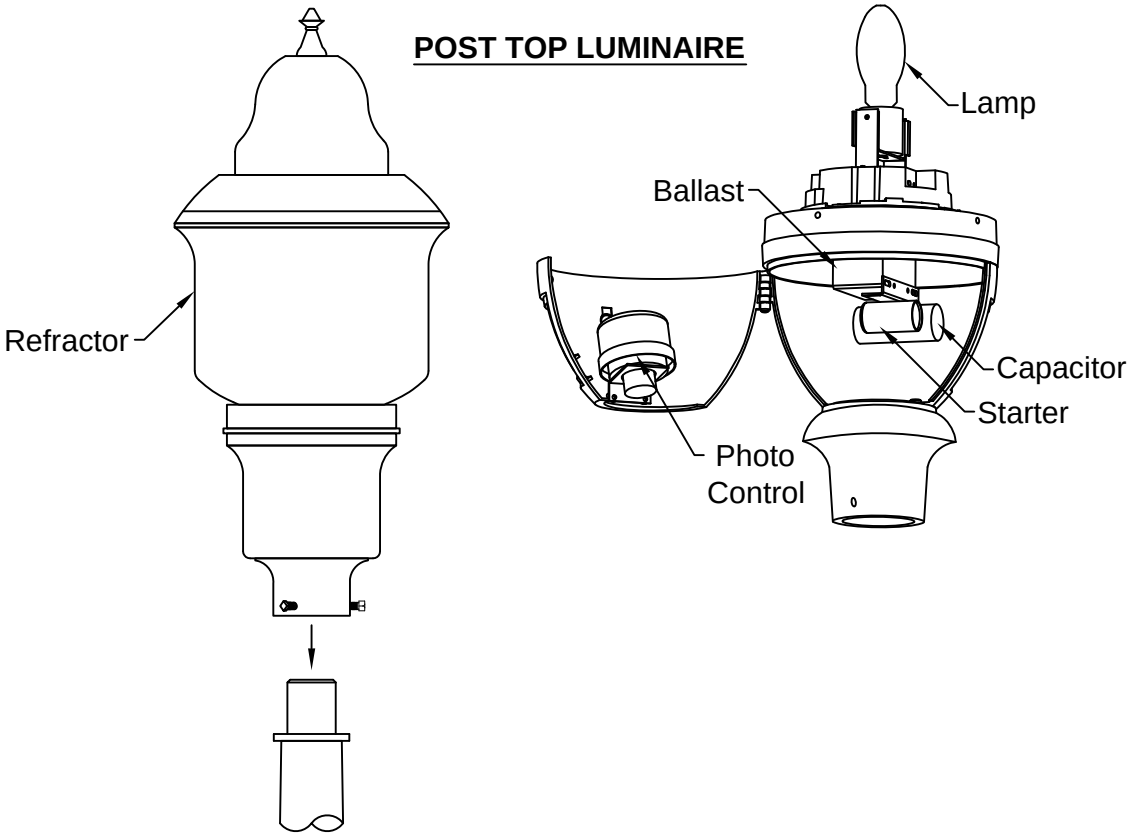

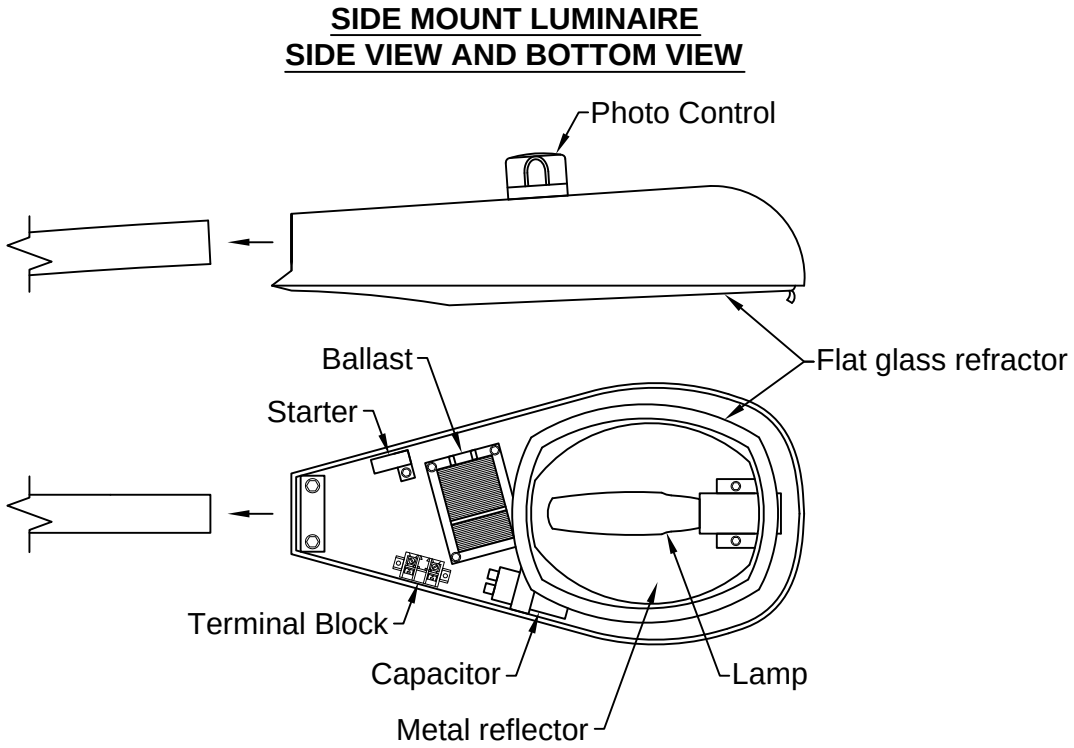

ODL CONSTRUCTION
LED LUMINAIRE COMPONENT DETAILS

SIDE MOUNT LUMINAIRE
SIDE VIEW AND BOTTOM VIEW

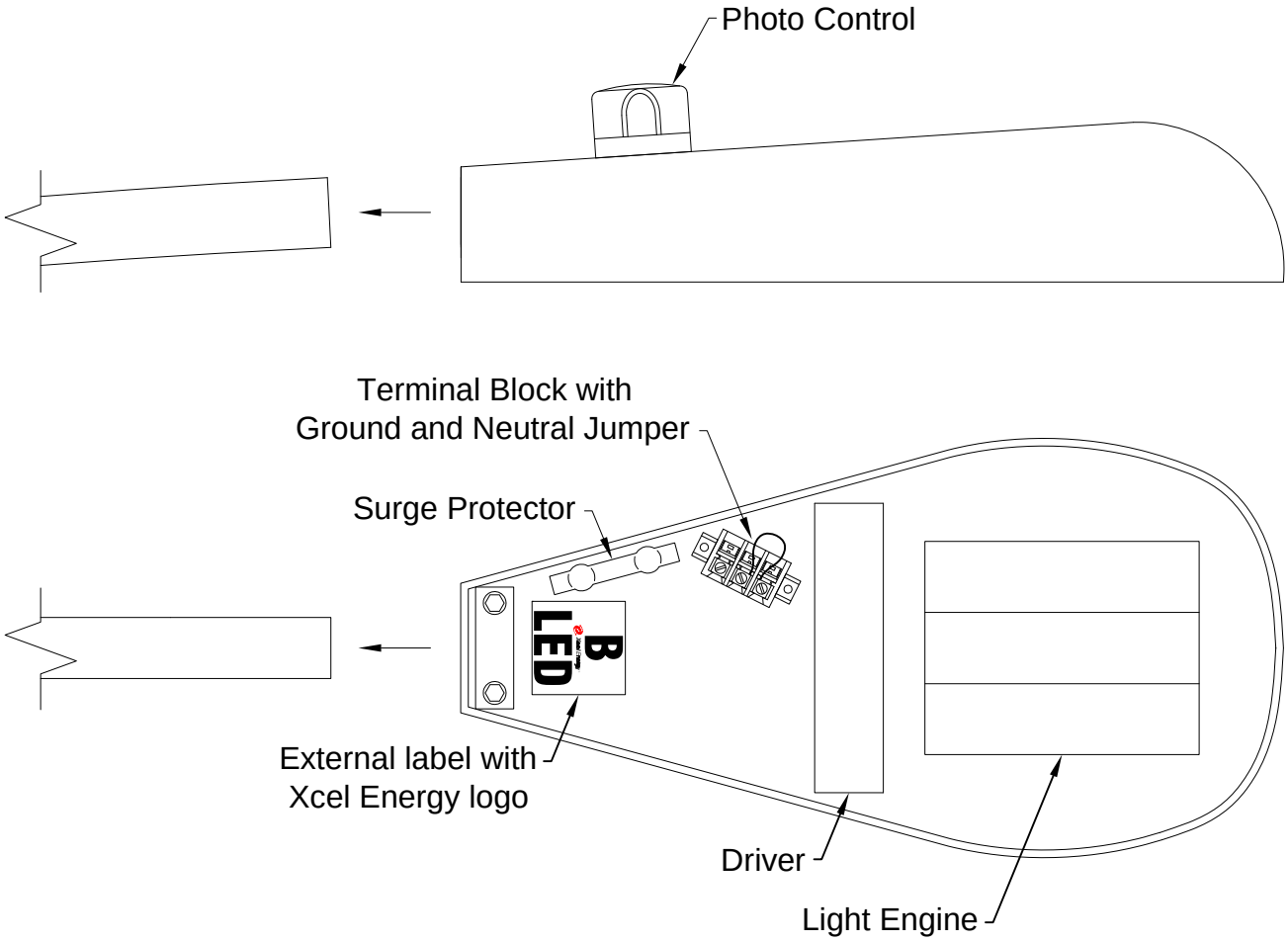

ODL CONSTRUCTION
LUMINAIRE VANDAL SHIELDS

HID Cobrahead

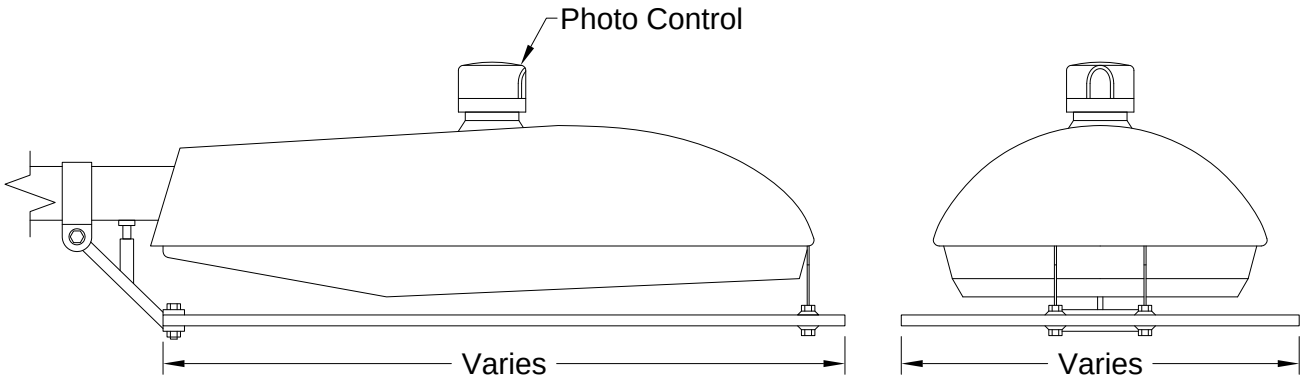

LED Cobrahead

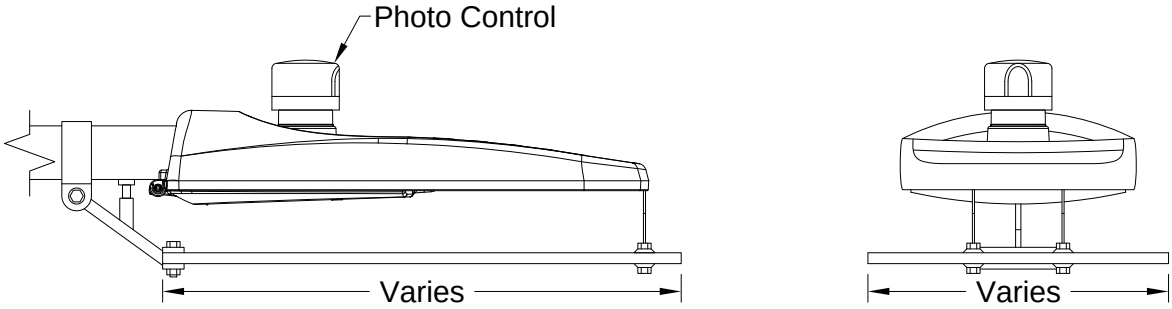

Notes:

1. Vandal shields to be installed on identified frequently vandalized fixtures.
2. See page ODL CONST-B.06 for correct shield to be used.
3. Vandal shields are rated to withstand impact of objects such as bullets (.22 caliber to .44 caliber), rocks, pellets, small projectiles, etc.

ODL CONSTRUCTION
LUMINAIRE VANDAL SHIELDS

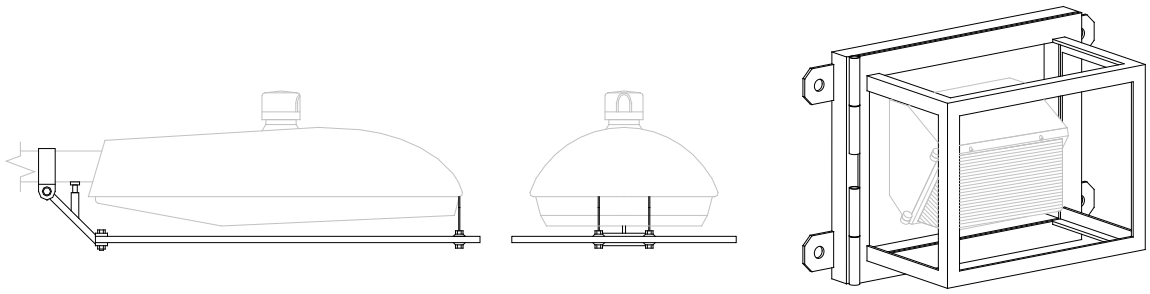

Vandal Shields			
Description:	**Lighting Type**	**Luminaire type**	**Cat ID No.**
Vandal Shield Lens[1]	HID	70 - 250 W Cobrahead Flat lens	220977
Vandal Shield Lens[1]	HID	400 W Cobrahead Flat lens	220978
Vandal Shield Lens[1]	LED	4000 Lumen - Small Cobrahead	221017
Vandal Shield Lens[1]	LED	6000 Lumen - Medium Cobrahead	221018
Vandal Shield Lens[1]	LED	14000 Lumen - Medium Cobrahead	221019
Vandal Shield Lens[1]	LED	25000 Lumen - Large Cobrahead	221020
Vandal Shield Cage[2]	HPS	150 W Wallpack	214262

Notes:
1. Vandal shields are rated to withstand impact of projectile objects such as bullets (.22 caliber to .44 caliber), rocks, pellets, etc.
2. Vandal Cage with Lexan Windows to protect Wallpack luminaires from impacts but not strong enough to withstand bullets.

ODL CONSTRUCTION
HIGH PRESSURE SODIUM BALLASTS

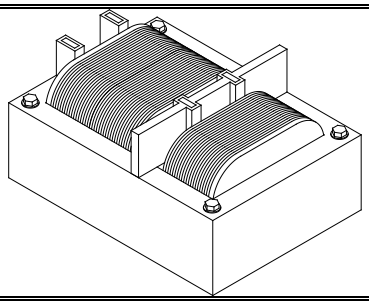

Replacement Ballasts			
Description:	**Lighting Type**	**ANSI Code Number**	**Cat ID No.**
70 W Ballast Kit, 120/208/240/277 V	HPS	**S62**	216011
100 W Ballast Kit, 120/208/240/277 V	HPS	**S54**	216013
150 W Ballast Kit, 120/208/240/277 V	HPS	**S55**	216014
200 W Ballast Kit, 120/208/240/277 V	HPS	**S66**	54295
250 W Ballast Kit, 120/208/240/277 V	HPS	**S50**	54302
400 W Ballast Kit, 120/208/240/277 V	HPS	**S51**	54284
1000 W Ballast Kit, 120/208/240/277 V	HPS	**S52**	54272

Ballast failures in luminaires are typically rare. If ballast fails in a Nightwatch luminaire (also known as Nemahead, Barnlight, Boogerlight) or Cobrahead luminaire, replace the entire fixture; this is more economical than just replacing the ballast. For all other luminaires, the ballast makes economic sense to replace the ballast only since the fixture is a much higher cost..

A High Pressure Sodium (HPS) outage may be due to failed ballast. Using a known good lamp and photo control, test the fixture. Then try replacing the starter. If the fixture does not come on, the ballast should be replaced. The exceptions are the Nightwatch and Cobrahead luminaire, in which the entire fixture should be replaced.

Xcel Energy has standardized on a multi-tap ballast for various system voltages. This allows one ballast to be used company-wide. The multi-tap ballast will cover 120V, 208 V, 240 V, and 277 V. If the ballast is being installed where 480 V is required, a special ballast will be needed.

The new ballast will come as a kit containing a ballast, starter and a capacitor (if applicable for that wattage).

If a fixture goes bad within the warranty period (typically 5 years), please submit for review through the Faulty Material process so the Company can take advantage of manufacturer warranties and track failures.

ODL CONSTRUCTION
HIGH PRESSURE SODIUM LAMPS

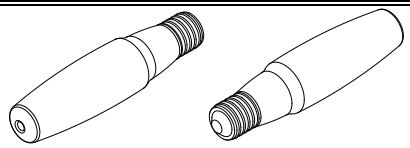

Replacement Lamps			
Description:	**Lighting Type**	**ANSI Code Number**	**Cat ID**
70 W Lamp, 52 V rated	HPS	**S62**	106429
100 W Lamp, 55 V rated	HPS	**S54**	106430
100 W Lamp, 55 V rated, 80,000 hrs life	HPS	**S54**	218145
150 W Lamp, 55 V rated	HPS	**S55**	106431
150 W Lamp, 55 V rated, 80,000 hrs life	HPS	**S55**	218146
200 W Lamp, 100 V rated	HPS	**S66**	53944
250 W Lamp, 100 V rated	HPS	**S50**	106432
400 W Lamp, 100 V rated	HPS	**S51**	106433
1000 W Lamp, 250 V rated	HPS	**S52**	106434

Xcel Energy is using High Pressure Sodium (HPS) as the standard for High Intensity Discharge (HID) light sources across the company. It is commonly used because of its long life, great lumen maintenance, low maintenance cost, and high reliability. It is the most common light source in the United States for outdoor lighting applications.

When installing an HPS lamp, install the correct wattage lamp with the correct wattage fixture. It is possible to place the incorrect wattage lamp into a fixture and have it come on, but this will drastically reduce lamp life. The ballast will regulate the output voltage to the lamp. 150 W and lower ballast will provide a nominal 55 V output (approximately 48 V - 62 V range). 150 W to 400 W ballast will provide a nominal 100 V output (approximately 85 V - 120 V range). You will notice that 150 W is common to use a 55 V output and 100 V output ballast/lamp combinations. Xcel Energy typically uses the 55 V lamps at 150 W. If excessive failures are occurring at 150 W, make sure the lamp/ballast combination is correct.

If the luminaire is cycling, it is commonly at the end of life for the HPS lamp. As a HPS lamp ages, it experiences a gradual voltage rise. When it reaches the end of life, the ballast can no long supply the needed operating voltage and the lamp goes out. This on and off behavior is called “cycling” and indicates end of life for the HPS lamp.
Please follow the steps below to confirm lamp failure for a cycling lamp:

a) Replace lamp with new lamp of correct ANSI type and wattage. If lamp continues to cycle, then:
b) Check for loose connections, including “seating” the lamp in the socket. If lamp continues to cycle then:
c) Check that the photocontrol is correctly wired and that load and line are not reversed. If lamp continues to cycle then:
d) Check for line voltage fluctuations. If lamp continues to cycle then:
e) Ensure that photocontrol photo cell is not aimed at a highly reflective surface or another light source. Follow up inspection at night may be necessary to ensure proper photocontrol aiming.

Lamp failures within the first two years of operation should be rare. Please mark the lamp bases with the date of installation so failures within this time period can be tracked. Any lamps that fail early should be sent to Electric Distribution Standards review using the Faulty Material process.

ODL CONSTRUCTION
METAL HALIDE and MERCURY VAPOR LAMPS
(Maintenance Only)

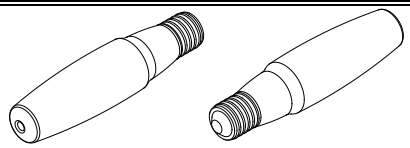

Replacement Lamps			
Description:	**Lighting Type**	**ANSI Code Number**	**Cat ID**
Metal Halide			
175 W Lamp, 125 V rated	MH	**C192**	214961
250 W Lamp, 125 V rated	MH	**C184**	214962
400 W Lamp, 125 V rated,	MH	**C185**	214963
1000 W Lamp, 260 V rated	MH	**M47**	53959
Mercury Vapor			
175 W Lamp, 100 V rated	MV	**H39**	88200
250 W Lamp, 100 V rated	MV	**H37**	106425
400 W Lamp, 100 V rated	MV	**H33**	66612
1000 W Lamp, 100 V rated	MV	**H36**	88208

Metal Halide and Mercury Vapor lamps are primarily for maintenance of legacy style luminaires. Lamp failures within the first two years of operation should be rare. Please mark the lamp bases with the date of installation so failures within this time period can be tracked.

Common lamp failure modes for Mercury Vapor and Metal Halide lamps include failure to start and burning dimly. The below steps should be taken when you encounter these failure modes:

a) Replace lamp with new lamp of correct ANSI type and wattage. If lamp continues to burn dimly or not start, then:
b) Check for loose connections, including “seating” the lamp in the socket. If lamp continues to burn dimly or not start:
c) Check that the photocontrol is correctly wired and that load and line are not reversed. If lamp continues to burn dimly or not start, then:
d) Check condition (swollen or damaged case) and verify the value (µF) of capacitor matches the manufacturer’s data label, if luminaire is so equipped. If lamp continues to burn dimly or not start then:
e) Check for correct voltage tap if luminaire is equipped with multi-tap ballast. If lamp continues to burn dimly or not start: If lamp continues to burn dimly or not start, then:
f) Replace the luminaire.

Any lamps that fail early should be sent to Electric Distribution Standards review using the Faulty Material process.

ODL CONSTRUCTION
STARTERS

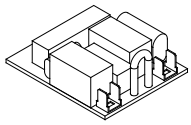

Universal Starter

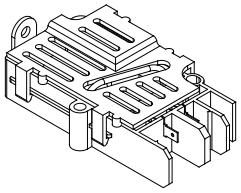

GE Plug-in Starter

Top View Bottom View

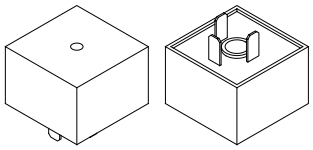

Cooper Plug-in Starter

Replacement Starter (Igniter)			
Description:	**Lighting Type**	**Restrictions**	**Cat ID No.**
Universal starter 50 W to 400 W	HPS	**-**	54327
GE plug-in starter 35 W to 400 W	HPS	**GE Luminaire Only**	54335
GE plug-in starter 50 W to 150 W	HPS	**GE Luminaire Only**	54320
GE plug-in starter 200 W to 400 W	HPS	**GE Luminaire Only**	106567
Cooper plug-in starter 200 W to 400 W	HPS	**Cooper Luminaire Only**	76950

Starters (sometime called igniters) are used to create a voltage spike (2500 V to 4000 V) to start the High Pressure Sodium (HPS) lamp. Once the lamp arc has been started, the starter drops out of the circuit. The starter on a normal night will only operate once. If a HPS lamp begins to cycle, the starter will attempt to turn on the lamp. An end-of-life cycling HPS lamp will cause the starter to operate more often than it would be with a normal HPS lamp.

If the starter is having problems, the lamp will not start. When servicing a luminaire, replace the lamp and photocontrol first and if the luminaire does not light up, then try replacing the starter.

It is preferred in Xcel Energy to use the universal starter because it can be used in any luminaire. The plug-in style is more convenient, but there is no agreement between manufacturers on the interface between the plug-in starter and the luminaire. So every plug-in starter is manufacturer-specific. For example, a GE luminaire with a plug-in starter can only use a GE plug-in starter. If the plug-in starter is removed, it can use the universal starter.

Be aware that most starters cover a range of wattages. Make sure you are using the correct wattage starter for the application.

ODL CONSTRUCTION
PHOTOCONTROLS

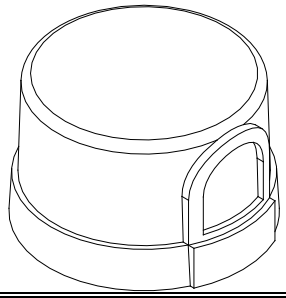

Photocontrols			
Description:	**C/U**	**Cat ID**	**Color**
Photocontrol, 105 V - 305 V, NEMA twist-lock	**ESPC**	106495	ANSI Blue
Long Life Photocontrol, 105 V - 305 V, NEMA twist-lock	**ESPCL**	216296	ANSI Black
Photocontrol, 480 V, NEMA twist-lock	**CONTACT EDS**		
Button-eye Photocontrol 120 V **Maintenance Only**	**-**	54350	Black
Button Photocontrol 208/240/277 V **Maintenance Only**	**CONTACT EDS**		
Shorting Cap - For luminaire with relay control or will be left on continuously	**-**	54366	Black

Photocontrols by default should be facing north. The National Electrical Manufacturers Association (NEMA) photocontrol receptacle should be oriented to face north. This is marked on the NEMA receptacle. If the photocontrol is inside the luminaire (e.g., post top luminaire) it may not be practical to orient the receptacle to face north because the luminaire has only a small window to allow light in to allow the photocontrol to operate properly. The luminaire can be oriented to face north as long as the proper Illumination Engineering Society (IES) lighting pattern is not altered (pay close attention to which side is the street side and which side is the house side of the luminaire). Most luminaires will allow field alteration of the lighting pattern. Consult with your local Outdoor Lighting group for guidance.

If field conditions make it impractical to orient the photocontrol receptacle to face north, such as high light trespass from a house or business, orient the photocontrol to point away from these light sources to minimize their impact. Keep in mind, car headlights can also impact the proper operation of a photocontrol. When troubleshooting a luminaire that keeps turning on and off, pay attention to other light sources in the area; light sources can cause the photocontrol to turn the luminaire off (i.e. neighbor's porch light or a flashing neon sign). Do not face photocontrols into oncoming traffic; this will cause the luminaire to shut off due to the high intensity light from headlights.

The typical failure mode of the photocontrol is for it to Fail-On. This is commonly referred to a "Day Burner". "Day Burner" indicates the most common photocontrol failures. Occasionally other components can fail in the photocontrol and cause the luminaire to fail off, but this is less common. If the luminaire is a repeat "Day Burner", check the luminaire for loose or broken wiring, usually going to the photocontrol.

All photocontrols have a minimum 6-year warranty. If a photocontrol is found to be defective, the unit can be returned to the manufacturer for a replacement. This also helps Xcel Energy improve the reliability of our lighting system.

ODL CONSTRUCTION
PHOTOCONTROL RECEPTACLES

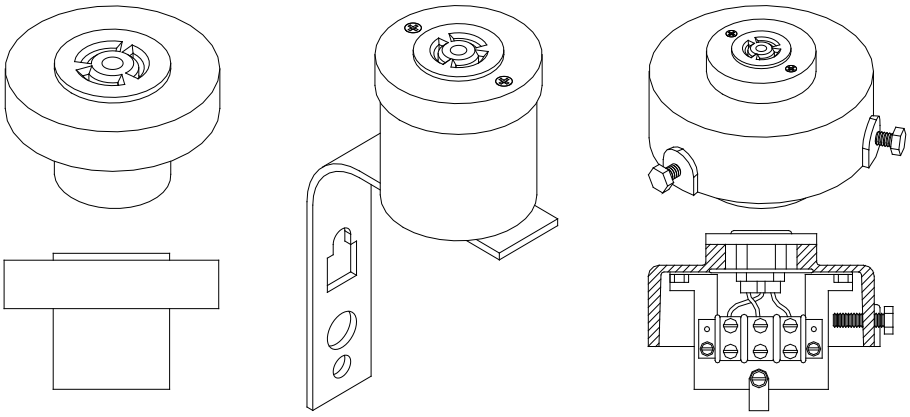

Luminaire photocontrol receptacle | Photocontrol receptacle with bracket | Pole Top photocontrol receptacle

Photocontrol Receptacle			
Description:	**C/U**	**Cat ID**	**Color**
Standard Offering			
Replacement NEMA twist-lock receptacle for luminaire. Rated up to 480 V	**-**	106491	Black
NEMA twist-lock receptacle for pole top mounting. 3.5” to 4.5” Outside Diameter range for pole top. Rated up to 480 V	**ESLSSOCK**	69759	Black
NEMA twist-lock receptacle with bracket for wood pole, crossarm or wall mounting. Bracket can be removed for enclosure mounting. 1/2” threaded stem for 1/2” enclosure knockout. Rated up to 480 V	**ESPCRP**	54355	Black

The photocontrol receptacles used by Xcel Energy are NEMA twist-lock type. These photocontrol receptacles are reliable. The receptacles will accept any photocontrol that is NEMA twist-lock compatible.

When examining the photocontrol receptacle, look for heat damage to the contacts or burnt/melted plastic. Also check the wiring to make sure the connection to the receptacle is intact and in good condition. A bad photocontrol receptacle can cause several issues that typically are not associated with the receptacle. For example, if the wiring in the NEMA receptacle is loose, it will give the appearance of a cycling lamp, but after a new lamp is put in, the cycling will continue. Also, if the contact is not providing a tight fit when the photocontrol is plugged in, the receptacle should be replaced. A loose fit between the receptacle and the photocontrol will result in poor electrical contact with the photocontrol and cause misoperation of the luminaire.

ODL CONSTRUCTION
PHOTOCONTROL RECEPTACLES
7-PIN

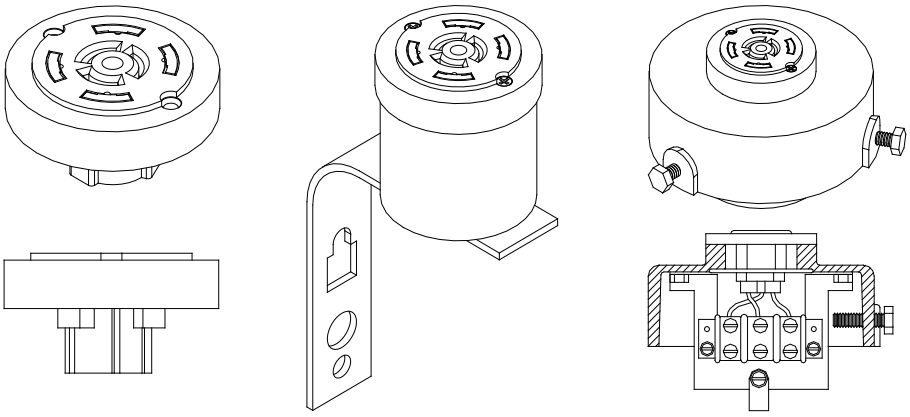

Luminaire photocontrol receptacle | Photocontrol receptacle with bracket | Pole Top photocontrol receptacle

Photocontrol Receptacles			
Description:	**C/U**	**Cat ID**	**Color**
Standard Offering			
Replacement NEMA twist-lock receptacle for luminaire. Rated up to 480 V	**-**	221153	Black
NEMA twist-lock receptacle for pole top mounting. 3.5” to 4.5” Outside Diameter range for pole top. Rated up to 480 V	**ESLSSOCKL**	221118	Black
NEMA twist-lock receptacle with bracket for wood pole, crossarm or wall mounting. Bracket can be removed for enclosure mounting. 1/2” threaded stem for 1/2” enclosure knockout. Rated up to 480 V	**ESPCRPL**	221154	Black

The photocontrol receptacles used by Xcel Energy are NEMA twist-lock type. These photocontrol receptacles are reliable. The receptacles will accept any photocontrol that is NEMA twist-lock compatible. The 7-pin receptacle will allow up to 4 ancillary electrical connections. In addition to the line, load, ground and neutral pins the other four will allow for luminaire dimming and any other future low voltage function that the company will designate. 7-Pin receptacles are compatible with all approved photocontrols.

When examining the photocontrol receptacle, look for heat damage to the contacts or burnt/melted plastic. Also check the wiring to make sure the connection to the receptacle is intact and in good condition. A bad photocontrol receptacle can cause several issues that typically are not associated with the receptacle. For example, if the wiring in the NEMA receptacle is loose, it will give the appearance of a cycling lamp, but after a new lamp is put in, the cycling will continue. Also, if the contact is not providing a tight fit when the photocontrol is plugged in, the receptacle should be replaced. A loose fit between the receptacle and the photocontrol will result in poor electrical contact with the photocontrol and cause incorrect operation of the luminaire.

ODL CONSTRUCTION
PHOTOCONTROL RECEPTACLE
POWER TAP ADAPTER

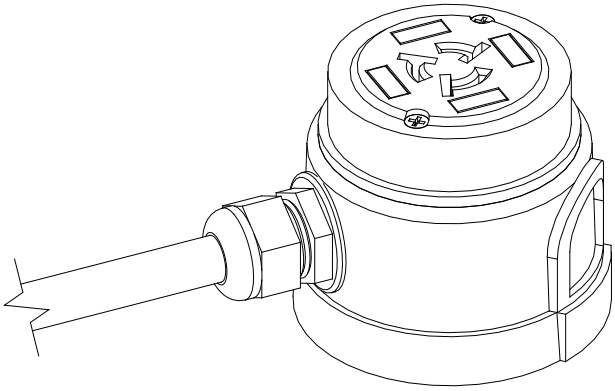

Power Tap Adapter			
Description:	**C/U**	**Cat ID**	**Color**
Standard Offering			
Integrated Power Tap Adapter with a 7-pin NEMA twist-lock receptacle. Rated up to 480 V	**ESPCRPTA**	221117	Grey

The photocontrol receptacle Power Tap Adapter works with all standard luminaires with either the 7-pin receptacle or the 3-pin receptacle. The Power Tap Adapter installs between the photocontrol or shorting cap and the receptacle providing constant 120 V AC power.

The Power Tap Adapter doesn't function as a photocontrol for the luminaire and doesn't interfere with normal photocontrol operation.

ODL CONSTRUCTION
TENON TOP INTERFACE

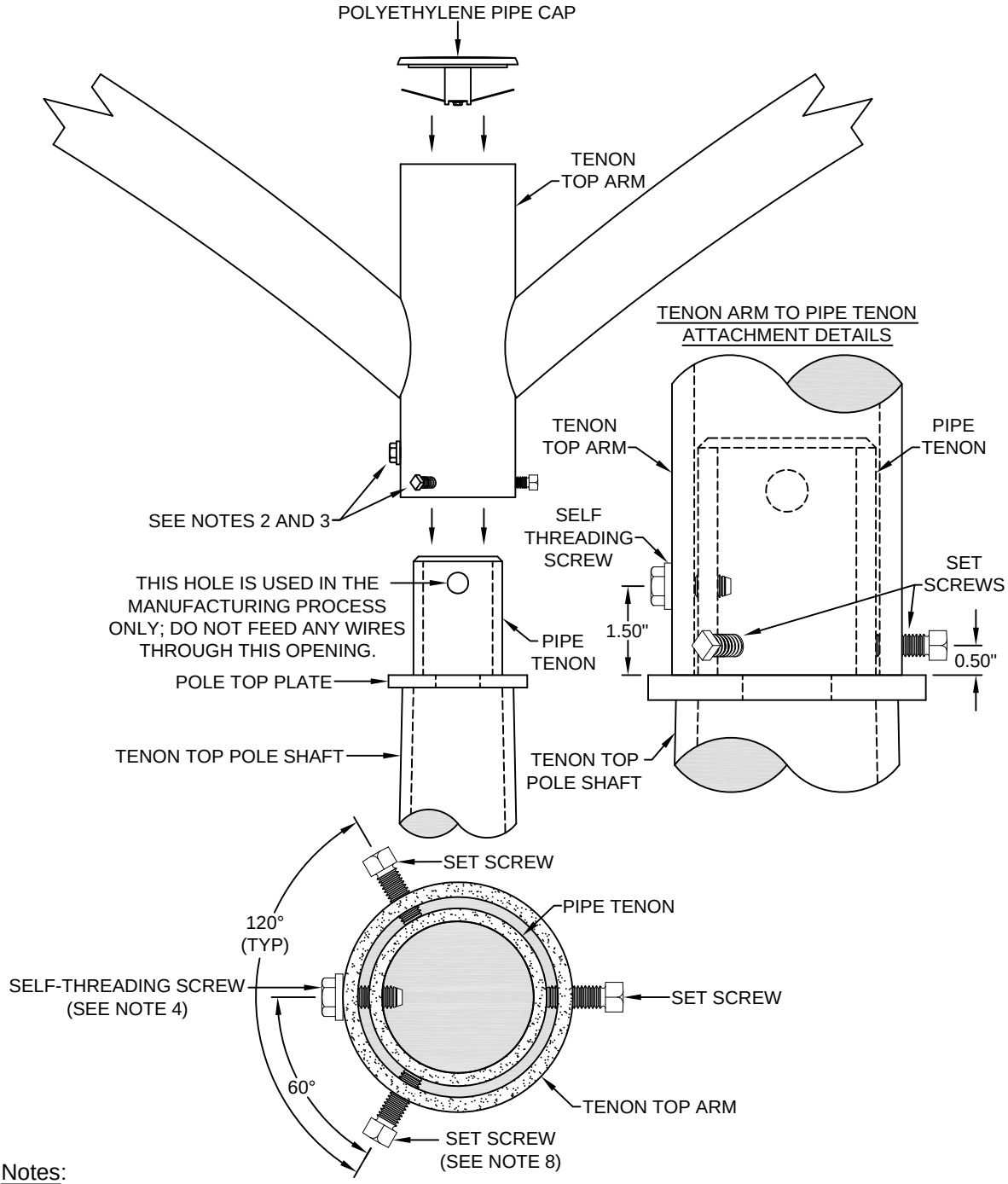

Notes:

1. Install and orient arm bracket over pole tenon.
2. Using the (3) 0.38"-16UNC tapped holes at 0.50" from lower end of tenon arm, insert the square head set screws and firmly hand tighten the set screws.
3. Use the last 0.38"-UNC tapped hole, located at 1.50" from the lower end of tenon arm, as a guide to drill a 23/64" diameter hole through pole tenon.
4. Install and tighten the self-threading hex head screw through the drilled 23/64" hole. The self-threading screw is to prevent rotation.
5. Tighten the (3) square head set screws an additional 1/4 to 3/8 turn.
6. Use Blue Loctite on set screws and self tapping screw.
7. Cup point set screws will dig into the pole tenon. This is necessary to hold arm secure to pole.

ODL CONSTRUCTION INSTALLATION FOR STREETLIGHT FOUNDATION AND PULLBOX

Beveled streetlight foundation installation on sloping ground

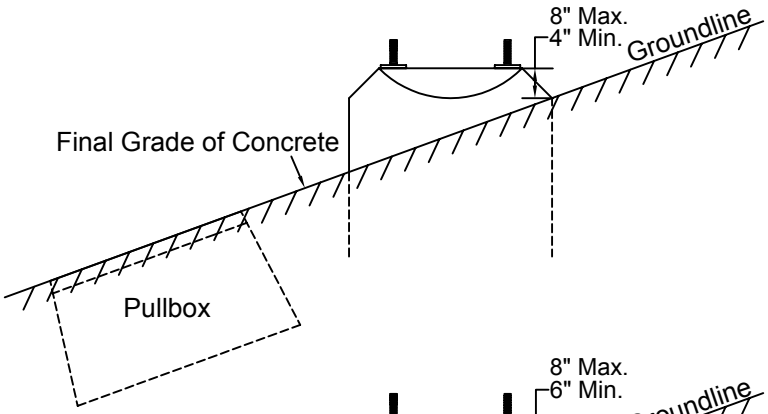

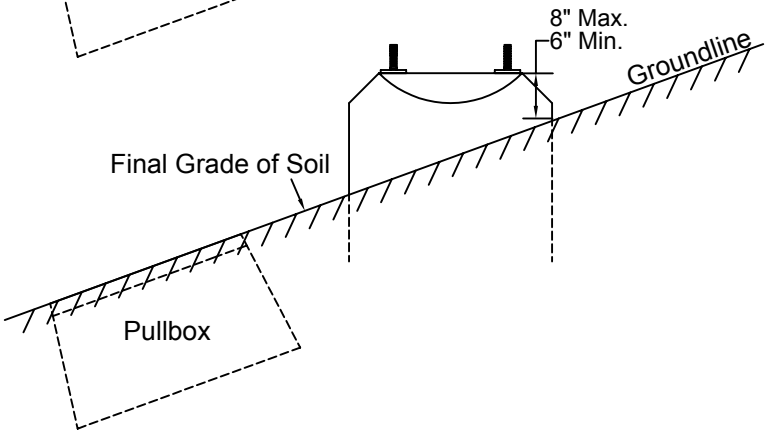

Beveled streetlight foundation installation on level ground

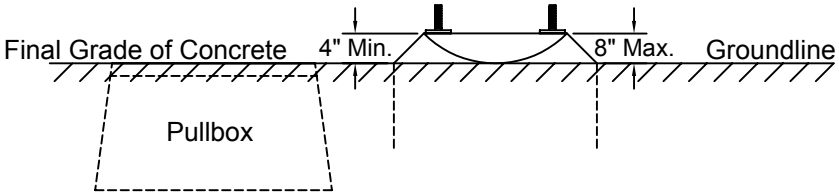

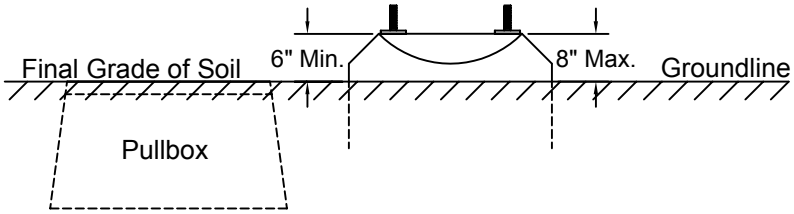

Notes:

1. The base of the pole should be installed to ensure adequate drainage and minimize corrosion.
2. Minimum of 4" on beveled foundations should be above the concrete final grade.
3. Minimum of 6" on beveled foundations should be above the soil final grade.
4. Pullbox should be installed at final grade to minimize tripping hazard.

ODL CONSTRUCTION
CONCRETE FOUNDATION
COMPACTION GUIDELINES

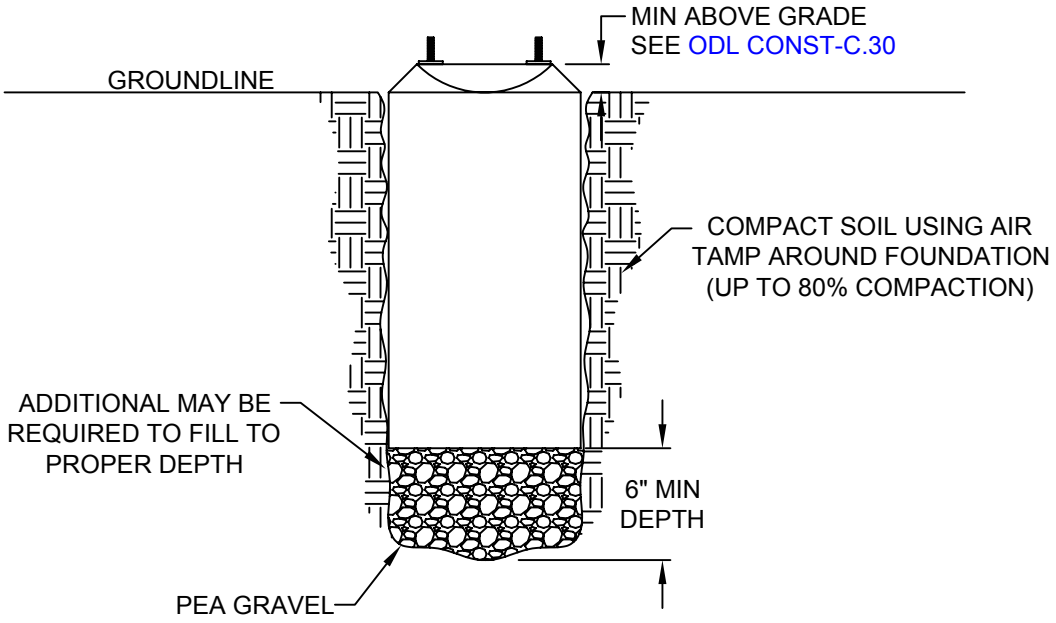

ODL CONSTRUCTION
LEVELING POLES ON PRECAST CONCRETE FOUNDATIONS

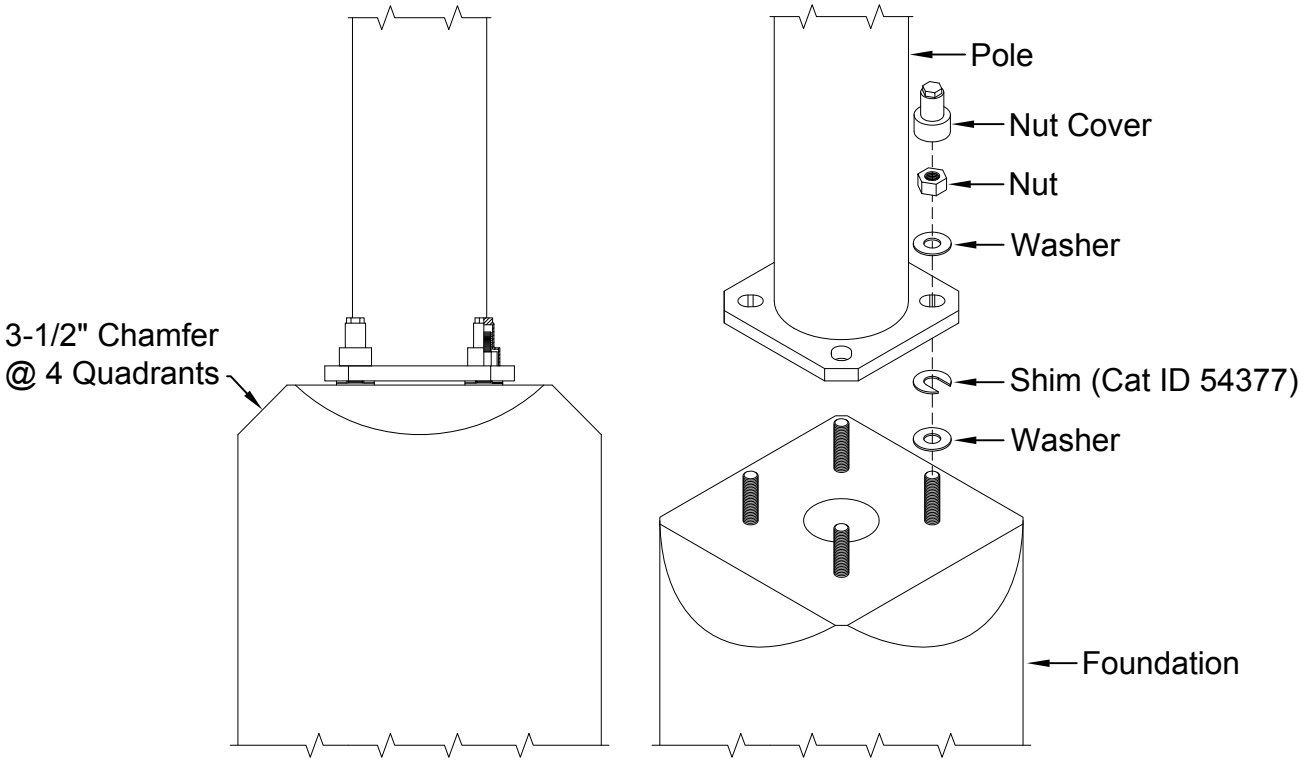

Notes:
1. Shims are available for leveling foundation mounted poles. See above drawing.
2. Do not use a second nut for leveling.

ODL CONSTRUCTION
CONCRETE FOUNDATION RISERS

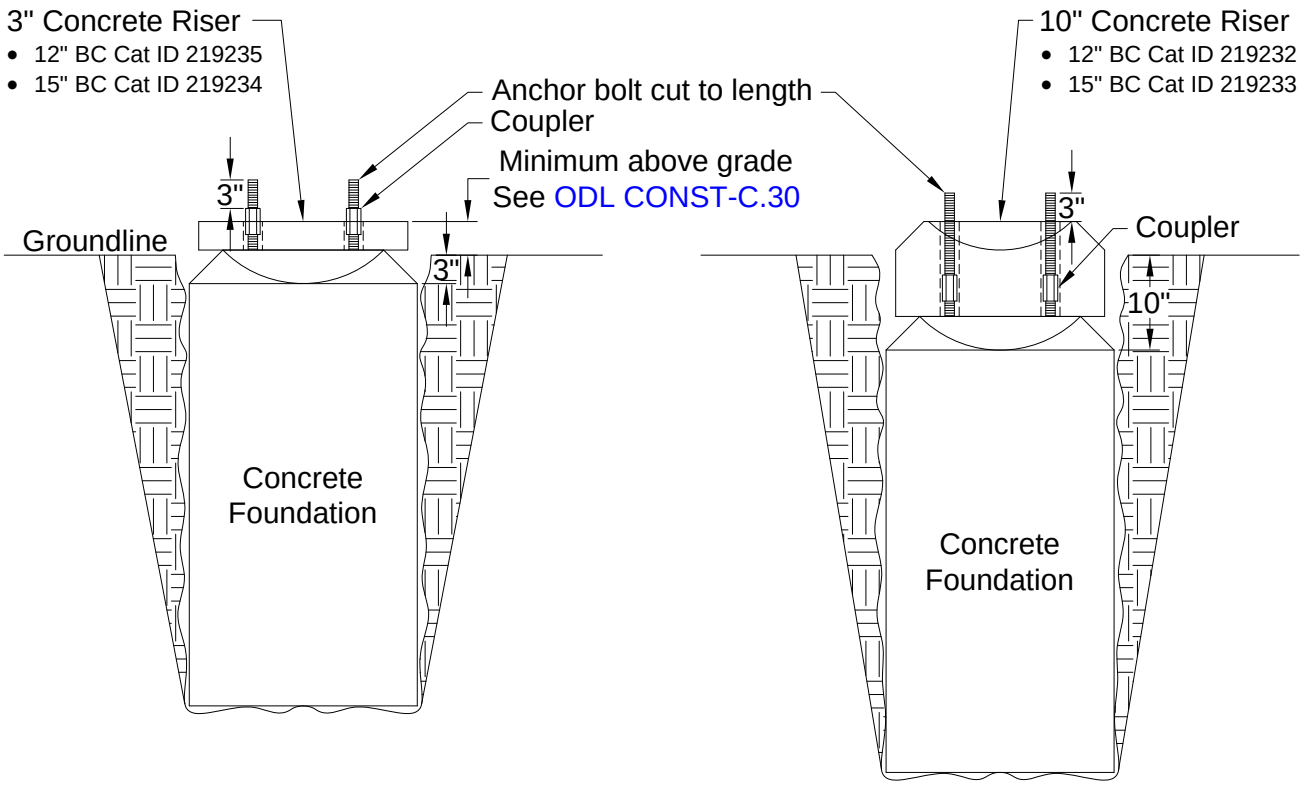

Notes:

1. Concrete risers are to be used for leveling sunken precast or poured in place concrete foundations.
2. The size of the riser to be used is determined by how much the foundations have sunk below grade.
3. Confirm size of existing anchor bolts and use appropriate coupler.

ODL CONSTRUCTION
BREAKAWAY SUPPORT

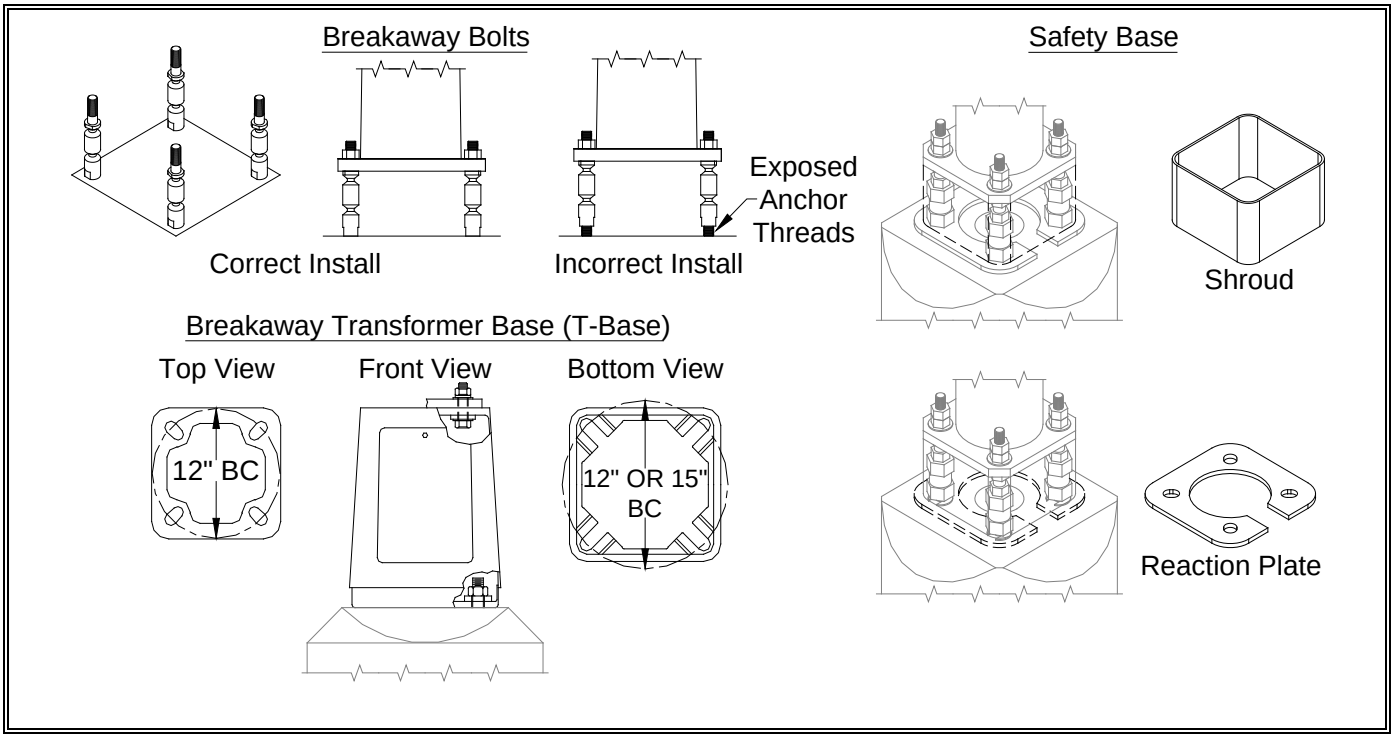

DO NOT use with 30 ft, 35 ft or 40 ft <u>double arm</u> poles. If breakaway bolts are requested for 30 ft, 35 ft or 40 ft <u>double arm</u> poles, contact Electric Distribution Standards.

The purpose of breakaway bolts is to provide protection to vehicle occupants in the event of a collision with a streetlight standard. Here are some situations where the application of breakaway bolts should be questioned:

1. Breakaway supports **should not** be used in urban areas where a falling streetlight standard could strike a pedestrian or cause property damage.
2. Breakaway supports **should not** be used on streetlight standards when located in road medians, due to the increased risk posed to opposing traffic.

When installing breakaway supports, they need to be above ground. Soil should not be piled around breakaway supports because this can cause corrosion which can lead to the pole falling over in normal conditions. In addition, excessively high ground level will cause the breakaway supports to not operate correctly and instead, bend the anchor bolts or cause the pole and impacting vehicle to absorb most of the damage. Conversely, if the soil level is too low, it can cause the vehicle to hit the foundation or the anchor bolts.

The breakaway bolt must be snug against the foundation without any of the anchor bolt exposed. If the anchor bolt is not covered by the breakaway bolt, it may not operate properly. The use of a reaction plate may be necessary if the breakaway bolt does not sit flush against the foundation.

No extra bolts are needed to use the breakaway bolts or breakaway transformer base. These breakaway supports include the necessary nuts, washers, and bolts to attach to the pole.
See Page ODL CONST-C.45 for more guidance on installation of the Safety Base version of the breakaway supports

If you have any questions about the use of breakaway supports, please contact EDS.

ODL CONSTRUCTION
BREAKAWAY SUPPORT
SAFETY BASE

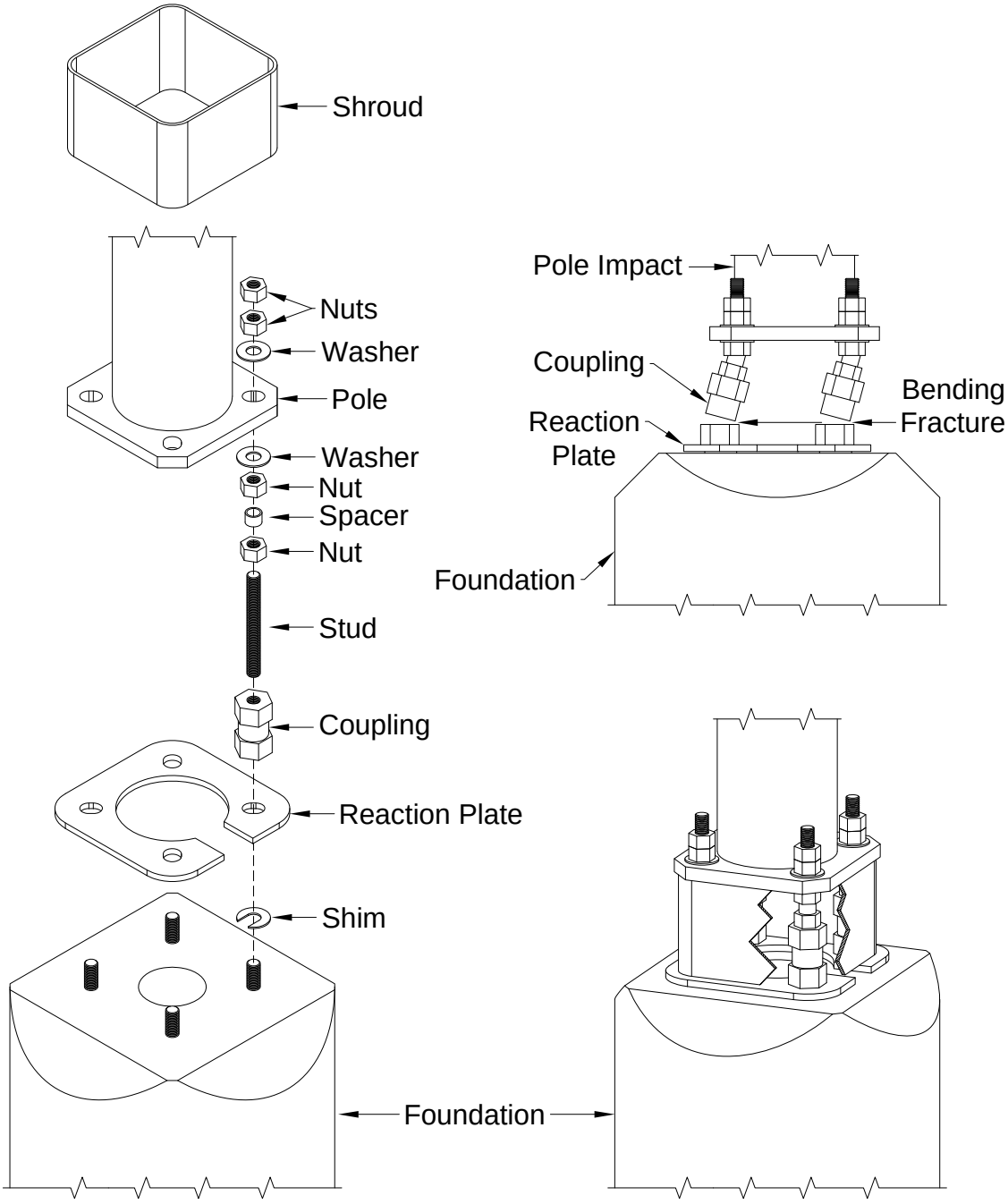

Notes:
Safety base breakaway supports can be used in place of breakaway supports or breakaway T bases. When a vehicle impacts a pole mounted on the "safety base", the mounting will allow the pole to breakaway. The couplers and brackets can be replaced with a new set - Cat ID 221152. See ODL CONST-C.40 for more guidance on breakaway systems.

ODL CONSTRUCTION
STREETLIGHT POLE LABELS

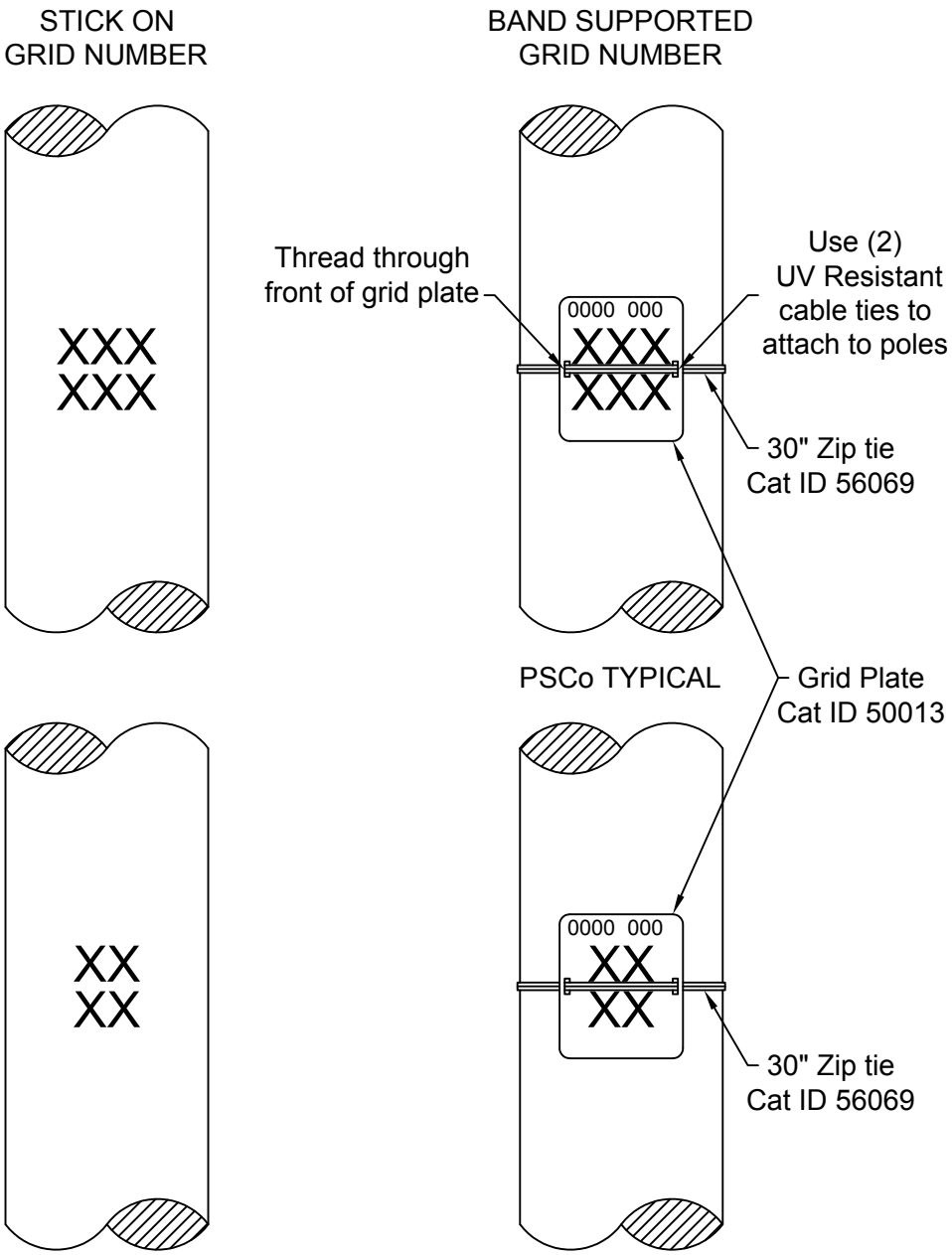

Notes:
1. Contact your local Operating Company streetlight for proper labeling procedure and format.
2. These are some typical example; other configurations possible.

ODL CONSTRUCTION
STREETLIGHT POLE LABEL
PSCo

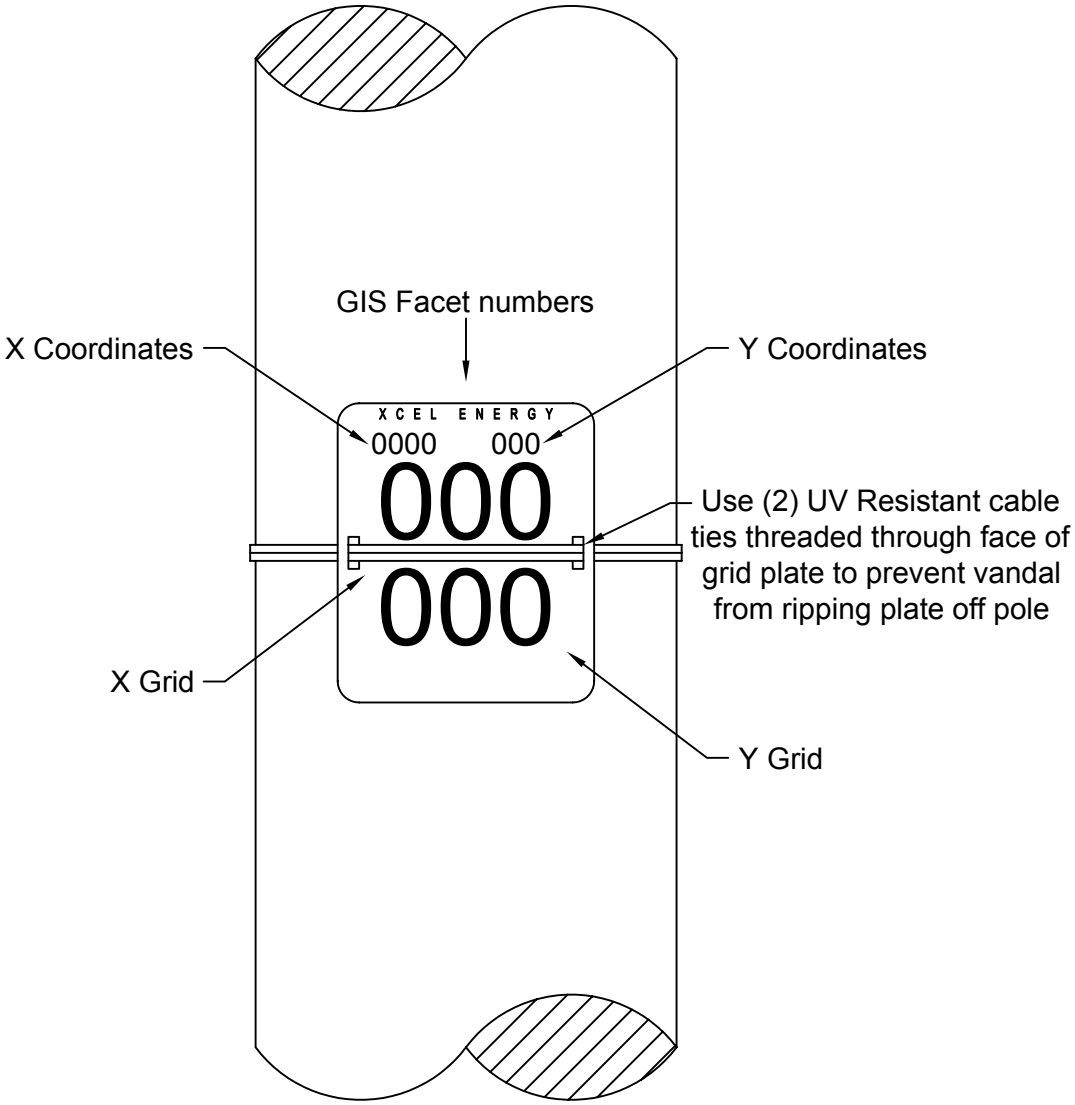

Notes:

1. Contact your local Operating Company streetlight for proper labeling procedure and format.

ODL CONSTRUCTION
TRAFFIC SIGNAL EXAMPLE DRAWING
PSCo

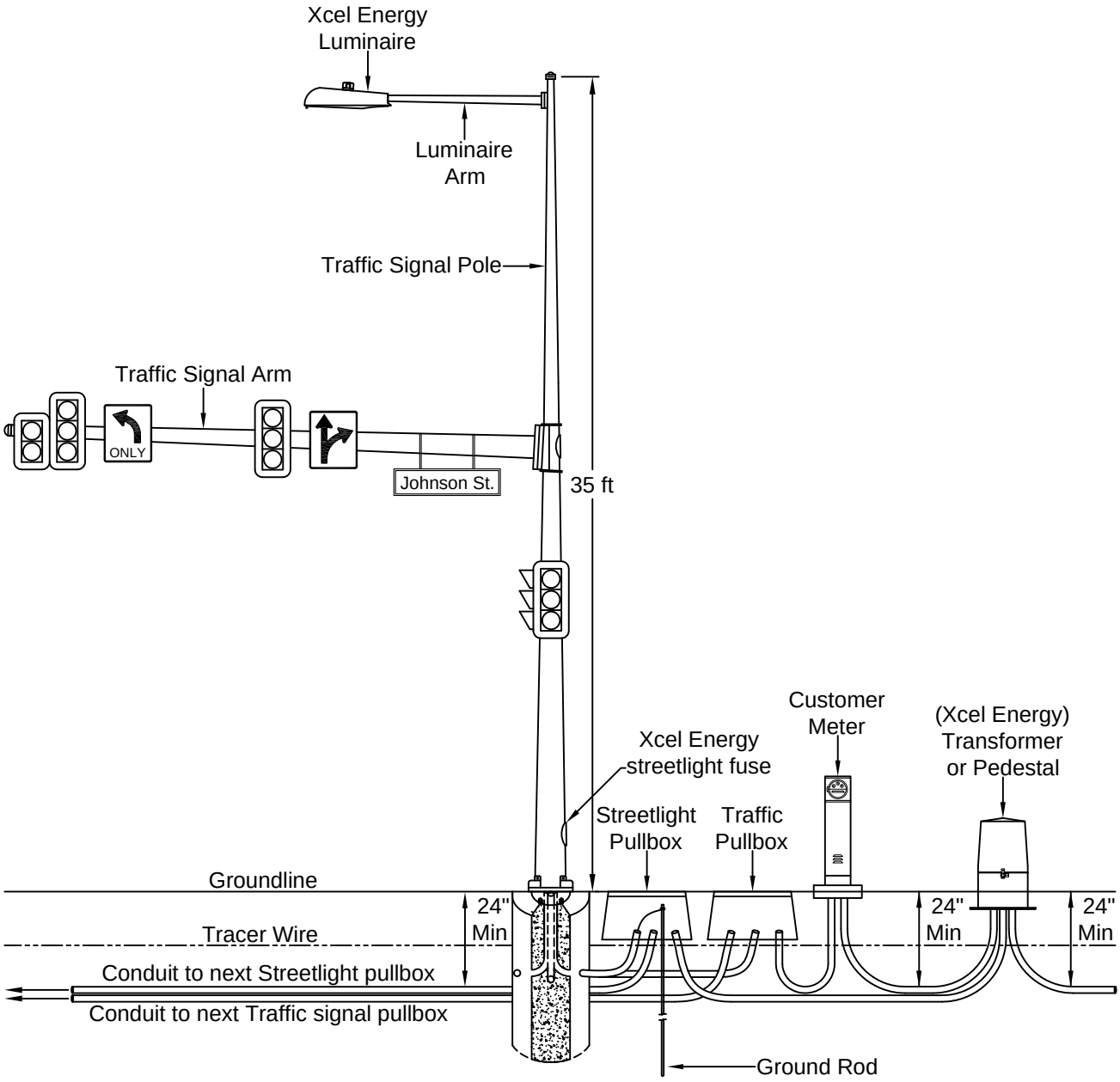

Notes:

1. Customer meter should be located near transformer or pedestal.
2. Traffic signal circuit cannot share streetlight circuit. The streetlight circuit must be wired from pedestal or transformer independent of the traffic signal circuit.
3. Traffic signals are only installed in PSCo.

ODL CONSTRUCTION PULLBOX DETAILS FOR DUPLEX AND TRIPLEX CABLE

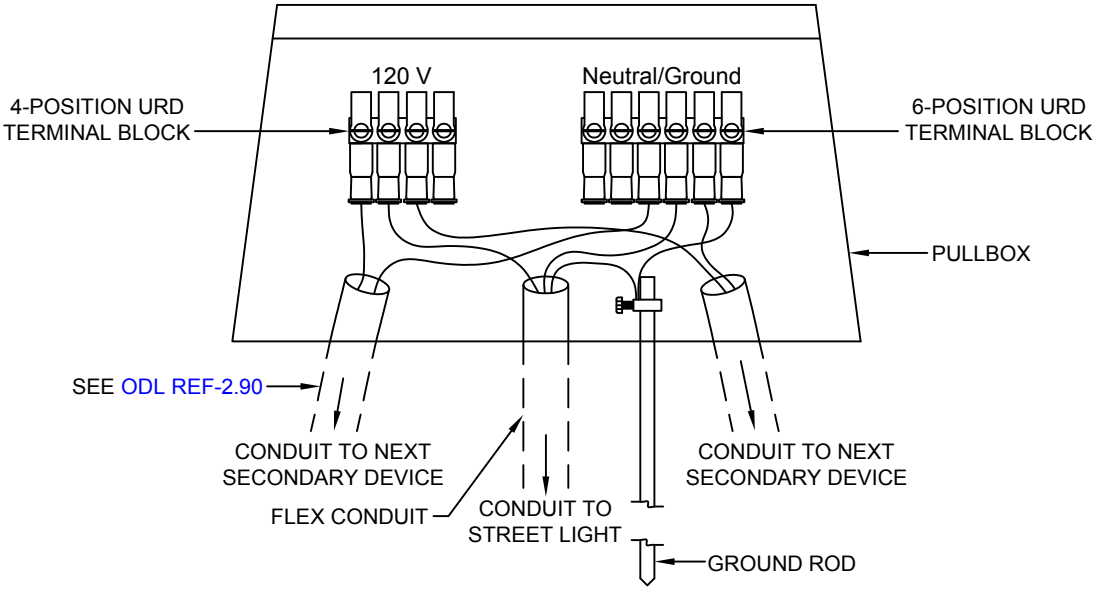

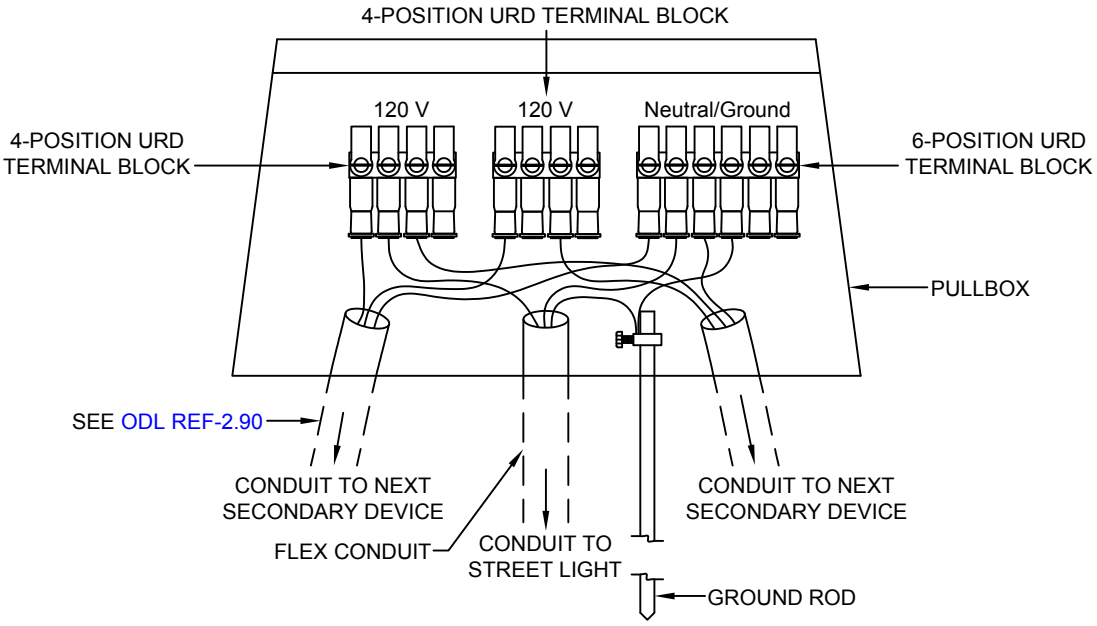

Notes:

1. While pole grounding is not required for fiberglass poles, the NESC requirement of a minimum of 4 grounds per mile must still be satisfied in design.
2. For standard cable in streetlight applications, see ODL REF-2.30.
3. For conduit in streetlight application, see ODL REF-2.90.
4. Streetlights with dual luminaires should have each luminaire fused separately in the handhole.

ODL CONSTRUCTION
ROADWAY LIGHTING LAYOUT AND STREETLIGHT HANDHOLE PLACEMENT

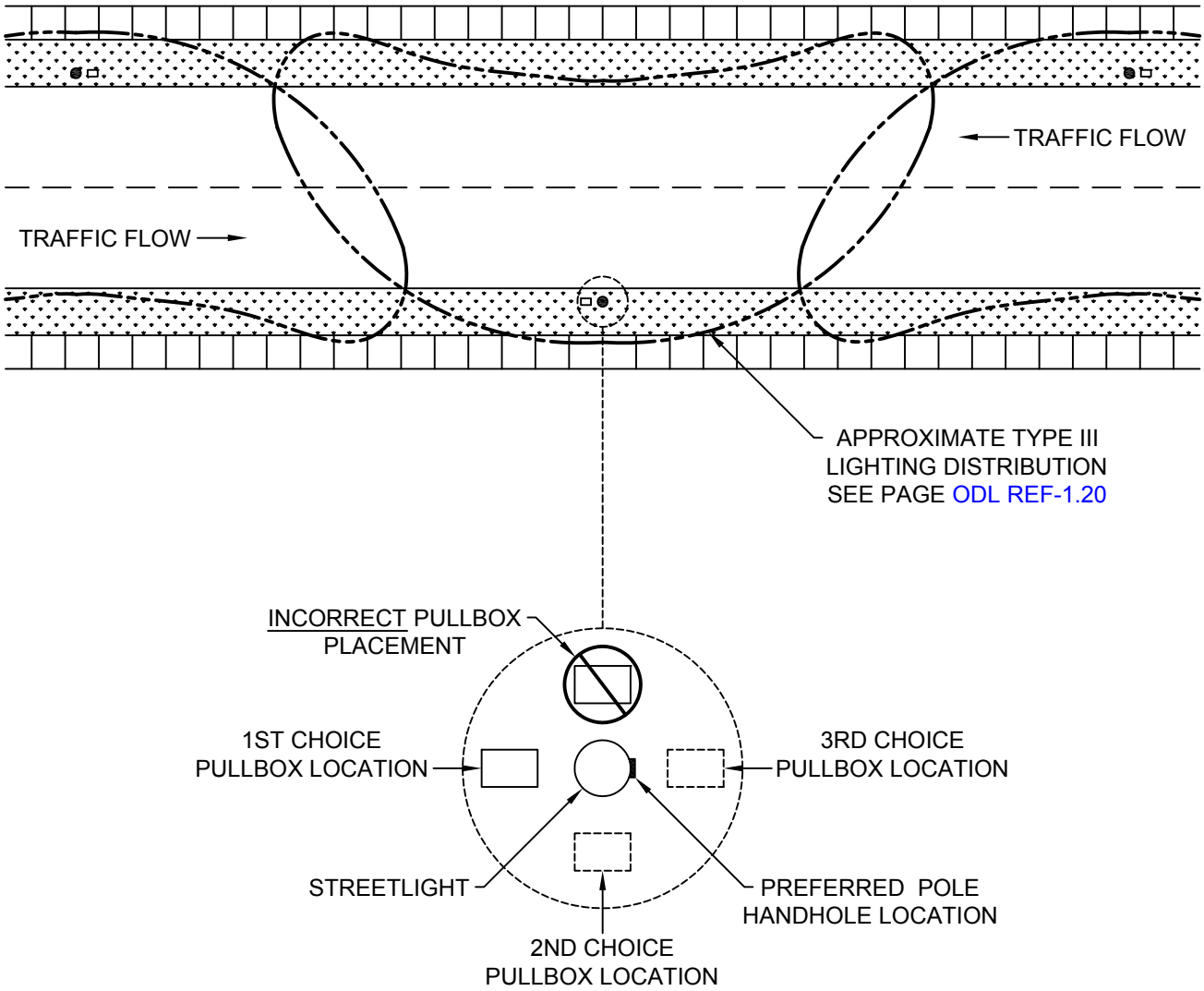

Notes:

1. Xcel Energy standard luminaires are type III lighting distribution. The lighting pattern shown above for type III lighting distribution is for example only. Consult Illumination Engineering Society (IES) and/or manufacturer for exact lighting pattern.
2. The installed location for streetlight pullbox should be on the upstream side of traffic from the streetlight whenever possible. Local conditions will determine exact location. Street side installation of pullbox is forbidden.
3. The preferred pullbox locations were chosen so as to minimize damages from accidents and avoid a tripping hazard.
4. Place streetlight hand hole on opposite side of traffic flow so lineman can see oncoming traffic.

ODL CONSTRUCTION
PULLBOX PLACEMENT GUIDE

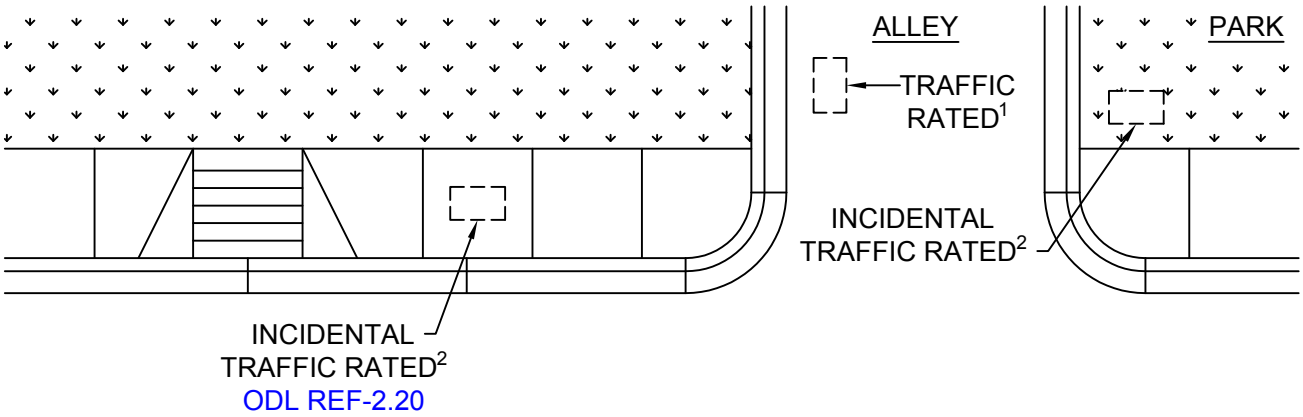

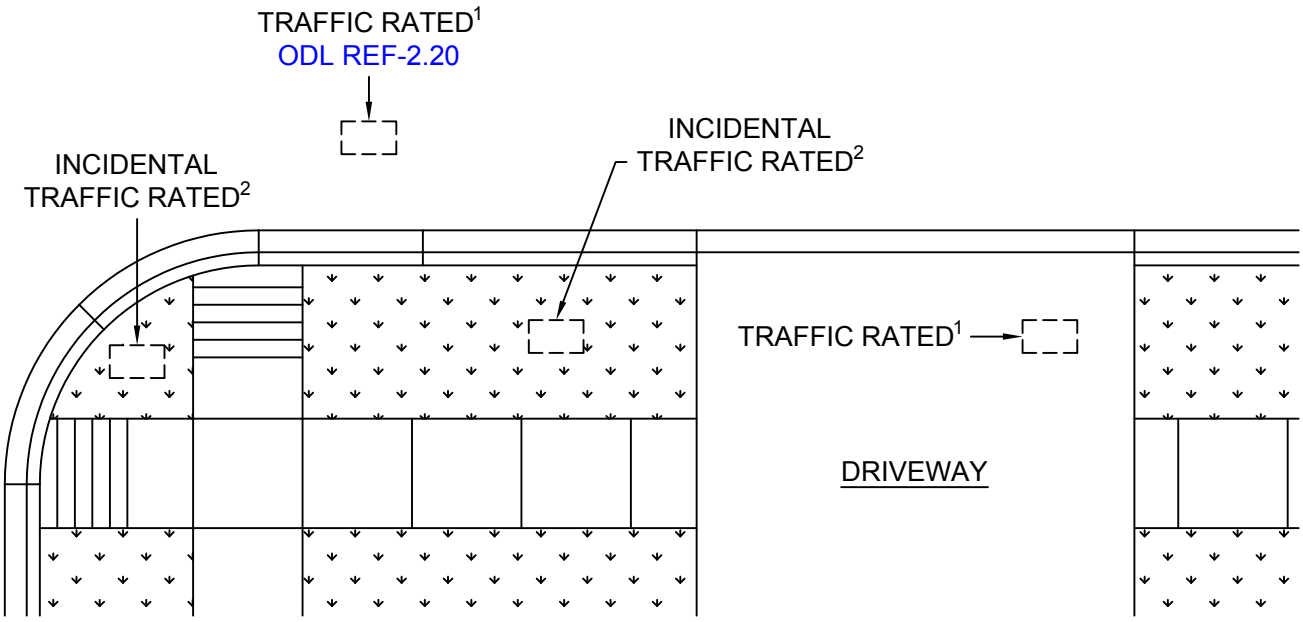

1. In cases where you need a **Traffic Rated pullbox**, the American Association of State Highway and Transportation Officials (AASHTO) H20 criteria is used. The AASHTO H20 rating is suitable for locations such as driveways, alleys, streets, and other areas where vehicle traffic is expected. The lid on these boxes is made of metal and as a result, must be properly grounded. These are significantly heavier and this is due to the heavy loading that these pullboxes will encounter from vehicular traffic. The AASHTO rating will be clearly marked on both the lid and the body of the pullbox.

2. Xcel Energy has adopted the American National Standards Institute (ANSI) Tier rating for **Incidental Traffic Rated pullboxes**. ANSI has implemented a testing criteria for side, corner, and top loading. This should eliminate or greatly reduce any pullbox failures experienced from loading. The proper application of these pullboxes is in areas where there might be vehicle loading. In addition, these pullboxes are made of corrosion resistant materials and are following Western Underground so the physical interface and hardware between manufacturers will be compatible. The ANSI rating and manufacturer will be clearly marked on both the lid and body of the pullbox.

ODL CONSTRUCTION
STREETLIGHT AND TRAFFIC CIRCUIT LAYOUT

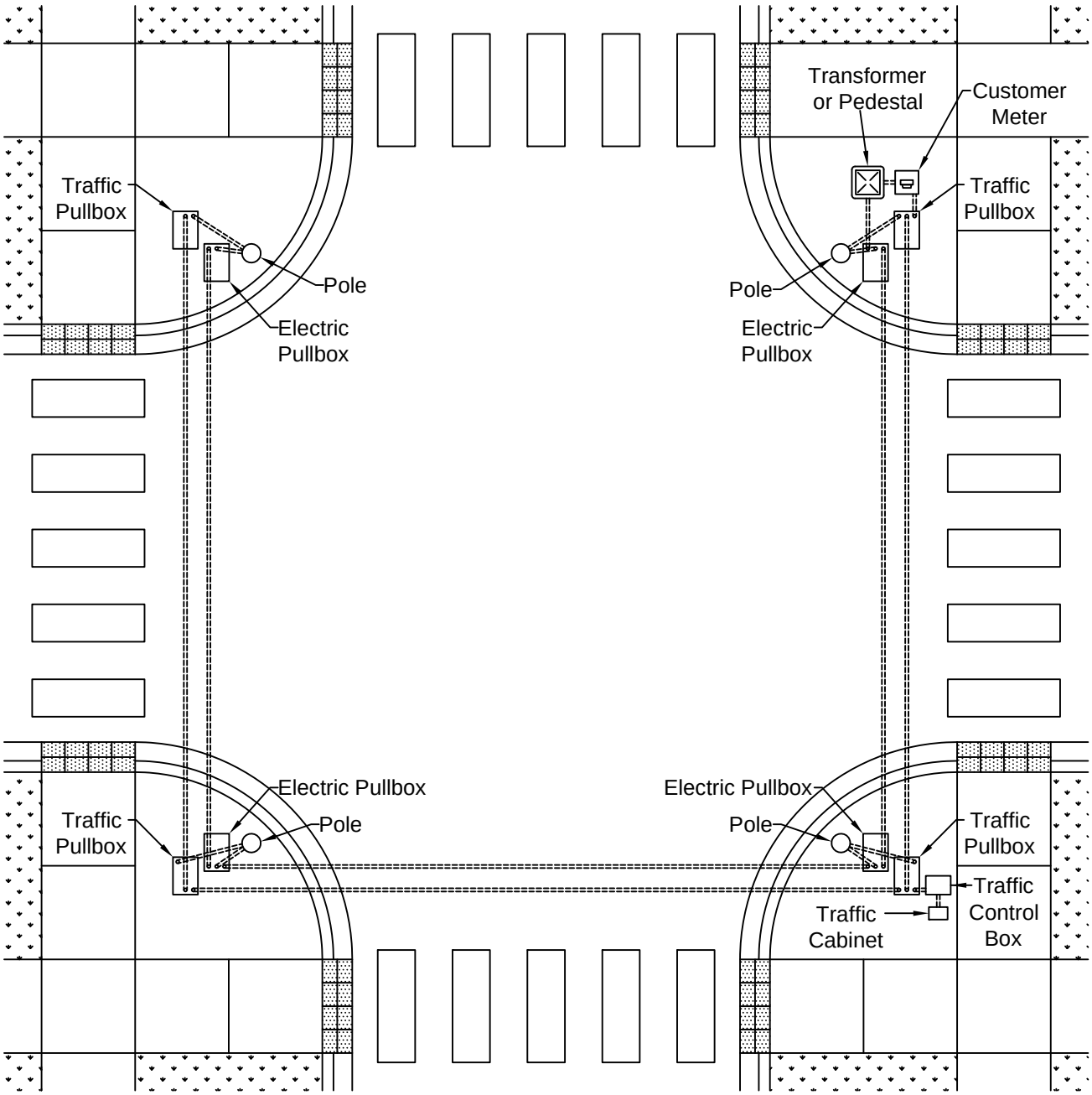

Notes:

1. This is for illustration purposes only. The customer side can vary.
2. The Xcel Energy conduit and electrical circuit must be separate from the Customer Meter conduit and electrical circuit for maintenance and tariff requirements.

Xcel Energy	Issued	Replaces	Drawn by	Approved	File	OUTDOOR LIGHTING MANUAL
	Jan-16	New	JD	GWB	ODL_CONST-G.25	PAGE ODL CONST-G.25

ODL CONSTRUCTION
WIRING 120 V & NEUTRAL FOR DUPLEX AND TRIPLEX

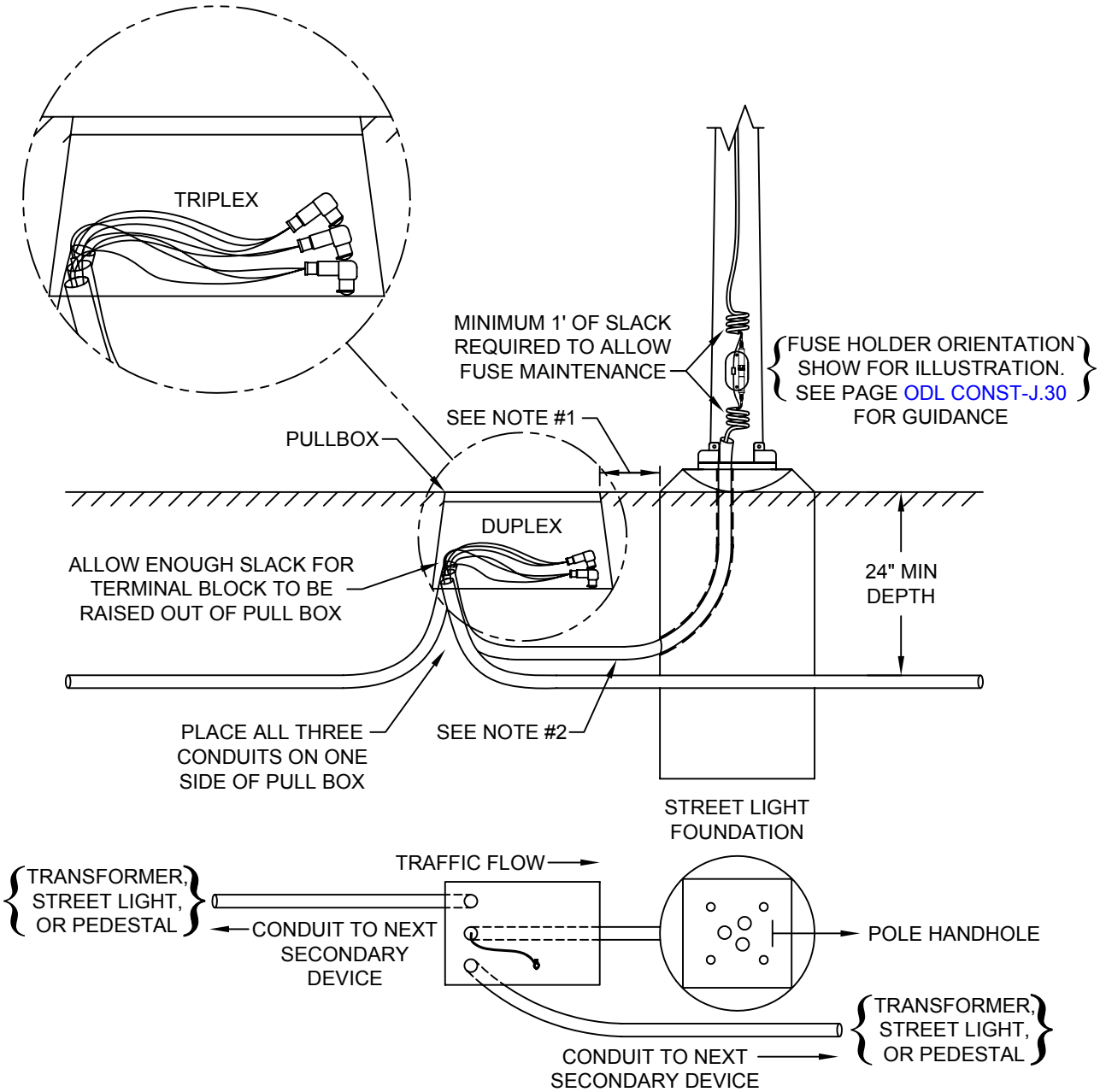

Notes:

1. Closest edge of pullbox shall be 1 ft to 3 ft from the foundation, except when field conditions dictate otherwise.
2. Each conductor shall be put into the conduit straight and not twisted, tied, or wrapped together inside the conduit. This causes operational issues and premature failures.

ODL CONSTRUCTION
PULLBOX INSTALLATION ARRANGEMENT

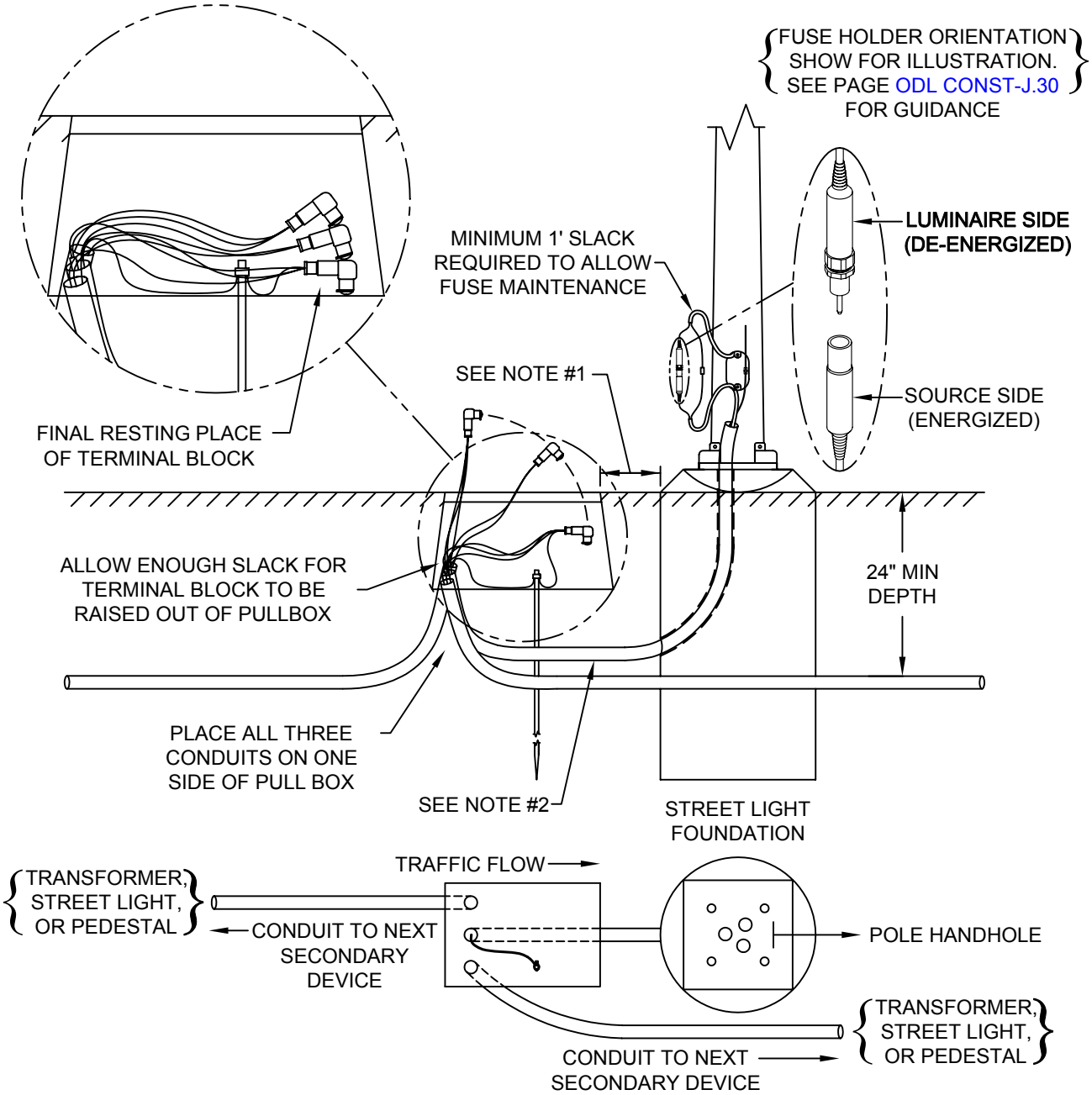

Notes:

1. Closest edge of pullbox shall be 1 ft to 3 ft from the foundation, except when field conditions dictate otherwise.
2. Each conductor shall be put into the conduit straight and not twisted, tied, or wrapped together inside the conduit. This causes operational issues and premature failures.

ODL CONSTRUCTION
GROUNDING INSTALLATION

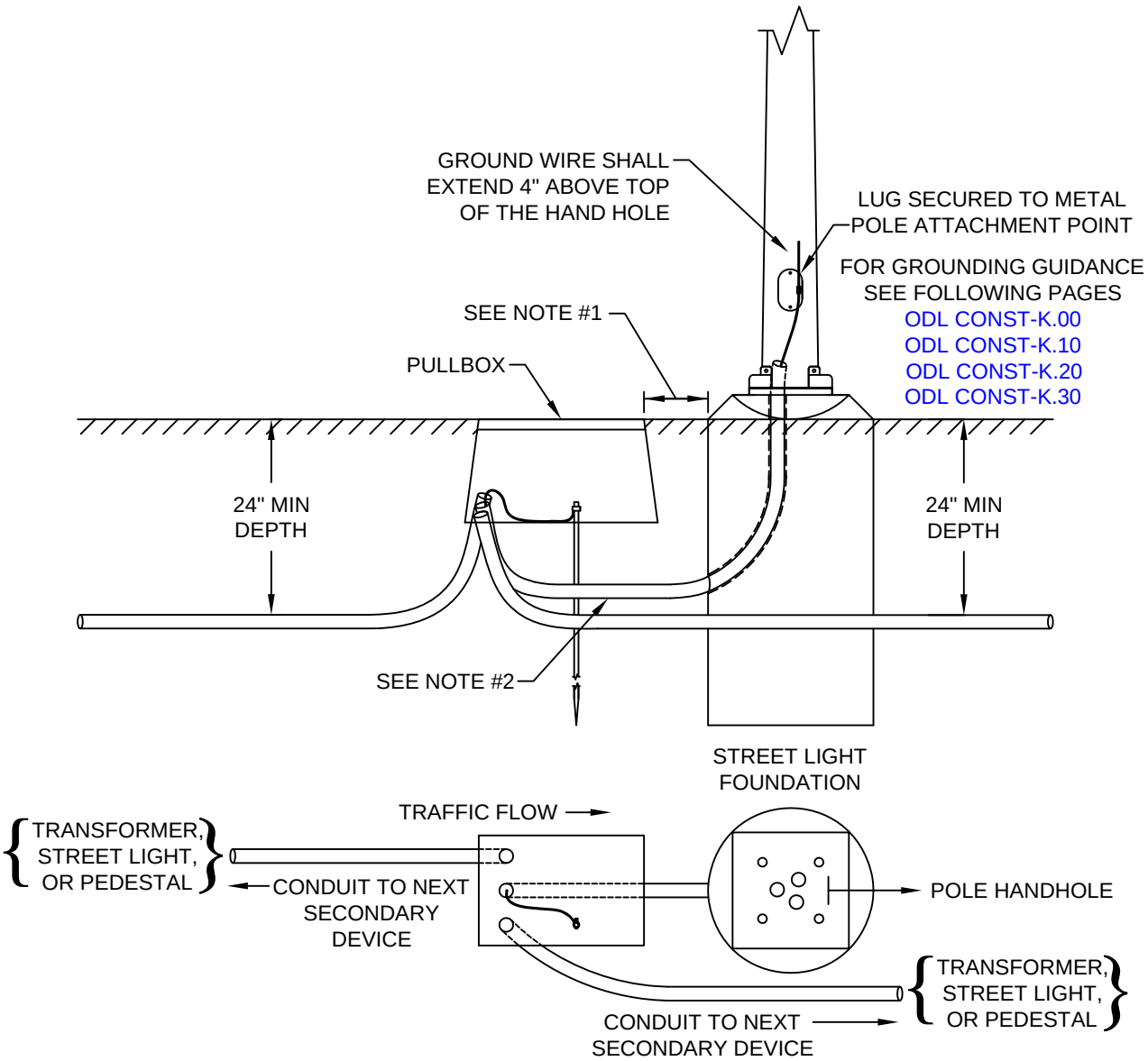

Notes:

1. Closest edge of pull box shall be 1 ft to 3 ft from the foundation, except when field conditions dictate otherwise.
2. Each conductor shall be put into the conduit straight and not twisted, tied, or wrapped together inside the conduit. This causes operational issues and premature failures.

ODL CONSTRUCTION
CONDUIT REPAIR INSTRUCTIONS

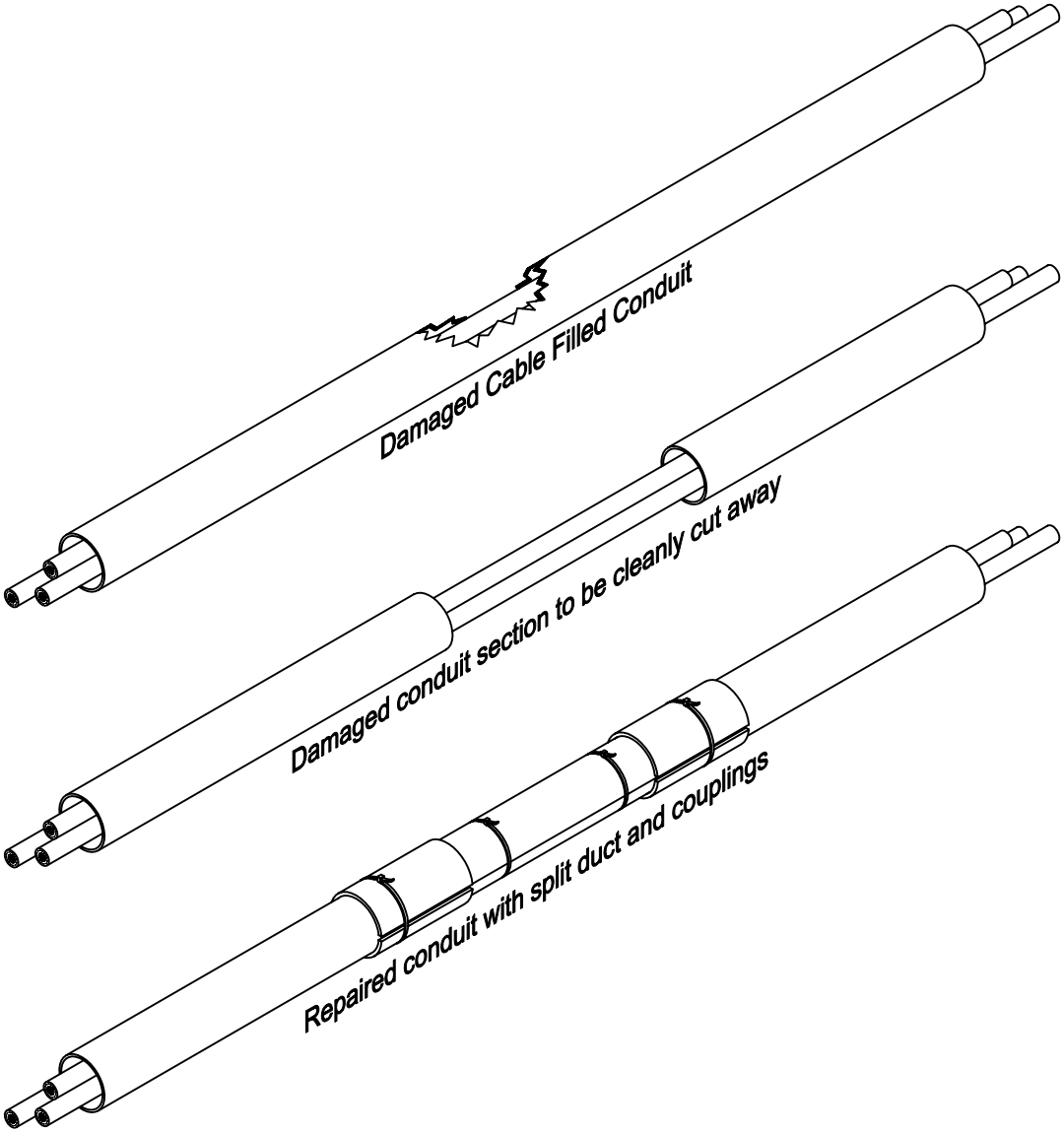

Notes:

1. Fix damaged conduit by cleanly cutting damaged section out of conduit.
2. Repair exposed area of conduit with split duct and split couplings. See page U-13.
3. **DO NOT break conduit to splice cable. If cable is damaged, it should be replaced.**

ODL CONSTRUCTION
CONDUIT APPLICATION

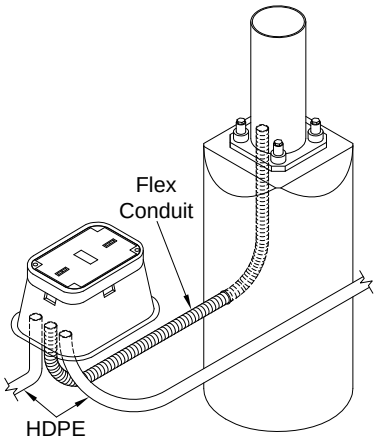

Precast foundation. Grey flex conduit shall only be installed from the pullbox to and up through the streetlight foundation to the base of the pole.

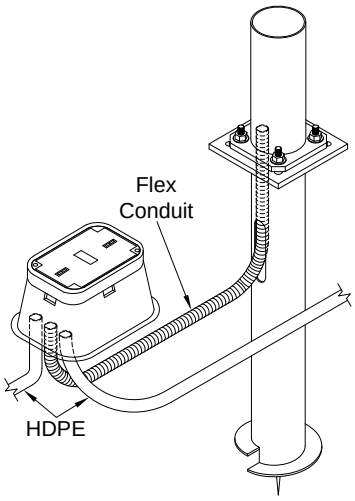

Helix foundation. Grey flex conduit shall only be installed from the pullbox to and up through the streetlight foundation to the base of the pole.

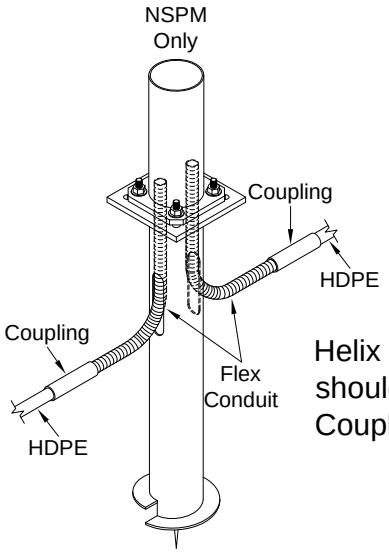

Helix foundation with no pullbox. Flex conduit should only be used inside the foundation. Couple with HDPE upon exiting the foundation.

ODL CONSTRUCTION
WALL AND CEILING
JUNCTION BOX MOUNTING DETAILS

EMBEDDED JUNCTION BOX

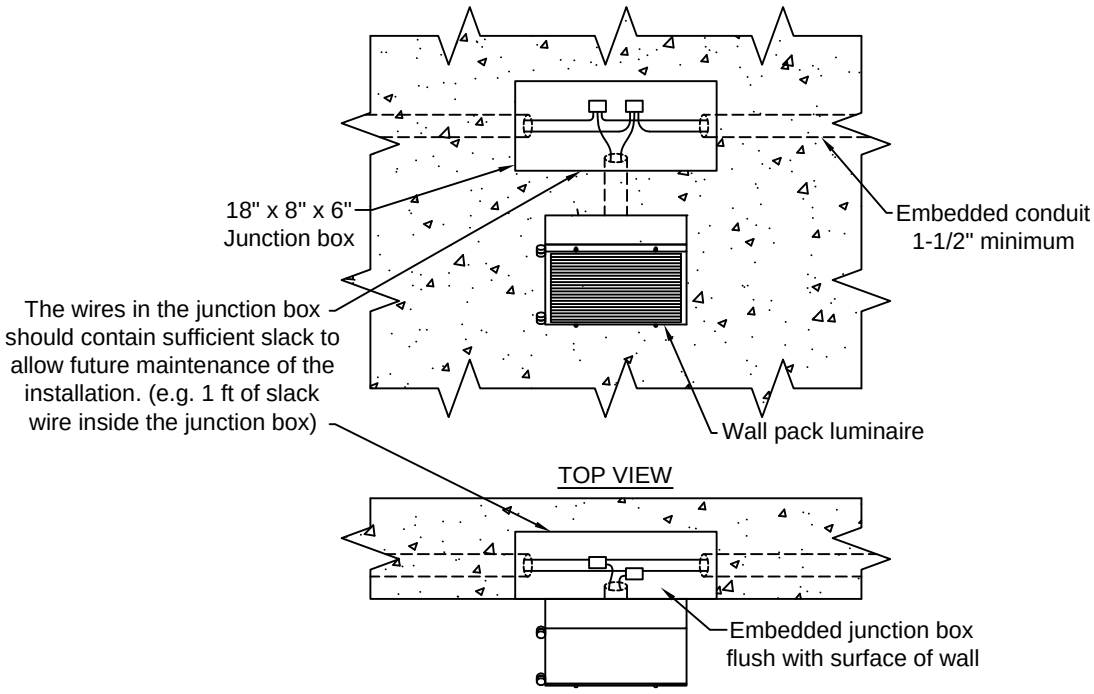

EXTERNAL MOUNTED JUNCTION BOX

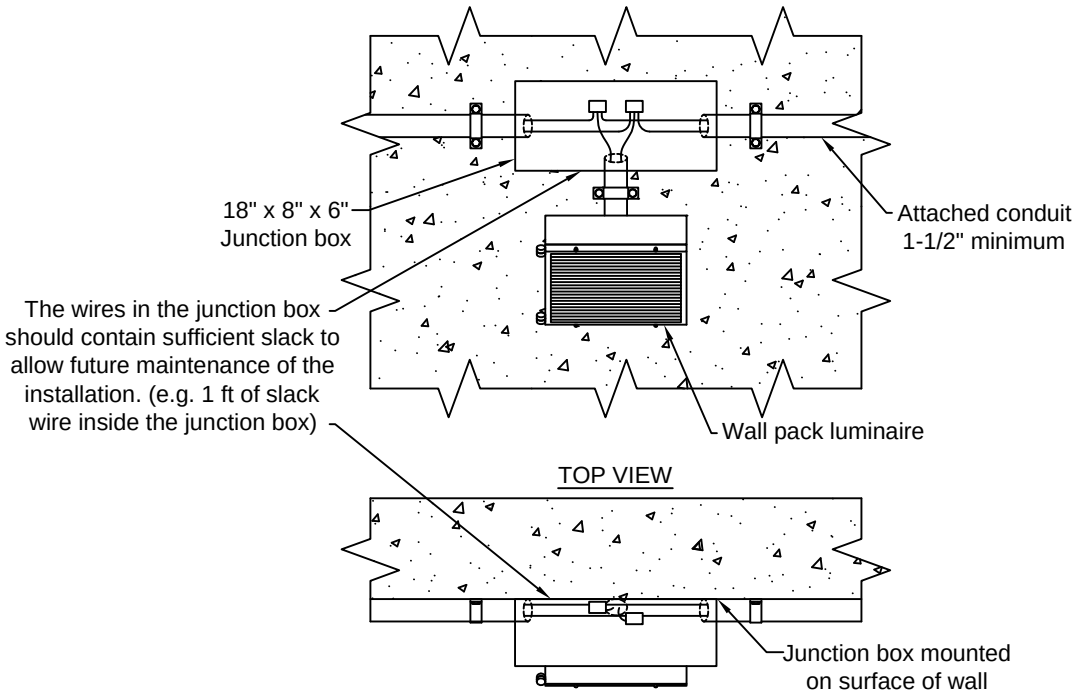

Notes:

1. Dimensions are to be no smaller than shown.
2. Stainless steel or hot dip galvanized box.
3. Stainless steel penta-head fasteners, 1/2" minimum.

ODL CONSTRUCTION
STREETLIGHT CIRCUIT LAYOUT

Underground Streetlight Feed, Branch Circuit (Duplex cable)

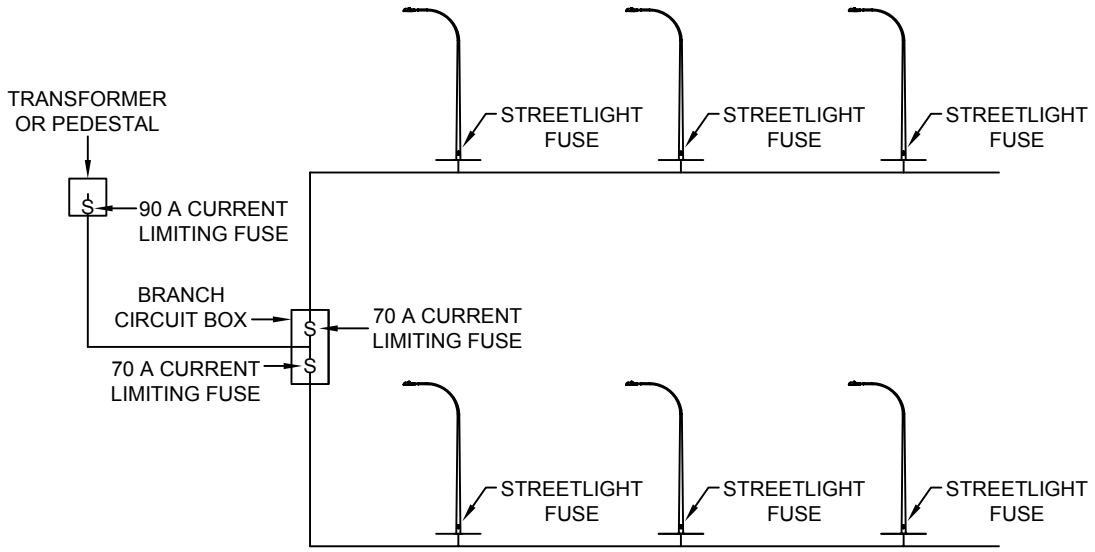

Underground Streetlight Feed (Duplex cable)
See ODL CONST-J.10, ODL CONST-J.20, ODL CONST-J.30, ODL CONST-J.40, and ODL CONST-J.50

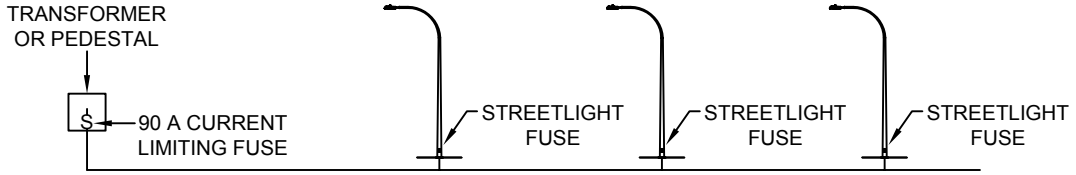

Underground Streetlight Feed (Triplex cable)
See ODL CONST-J.10, ODL CONST-J.20, ODL CONST-J.30, ODL CONST-J.45, and ODL CONST-J.55

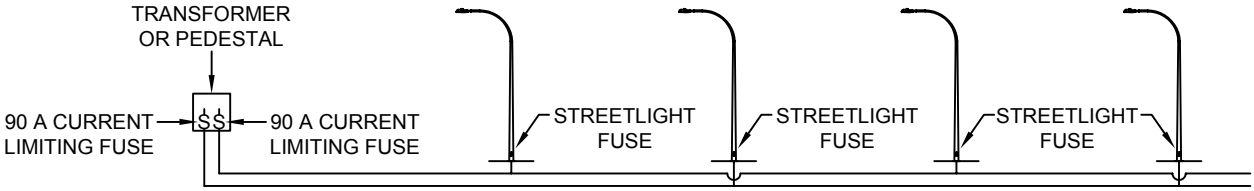

Overhead to Underground Streetlight Feed (Triplex cable)
See ODL CONST-J.10, ODL CONST-J.20, ODL CONST-J.30, and ODL CONST-J.60

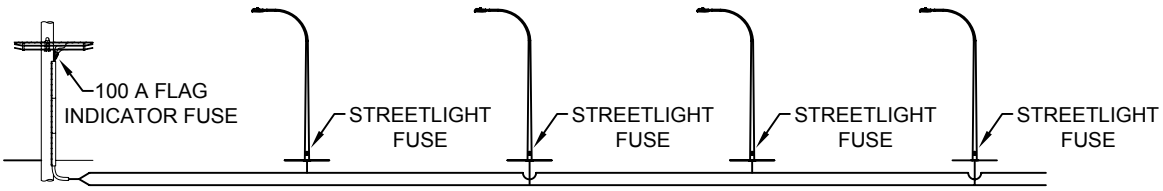

ODL CONSTRUCTION
STREETLIGHT WIRING WITH LUMINAIRE

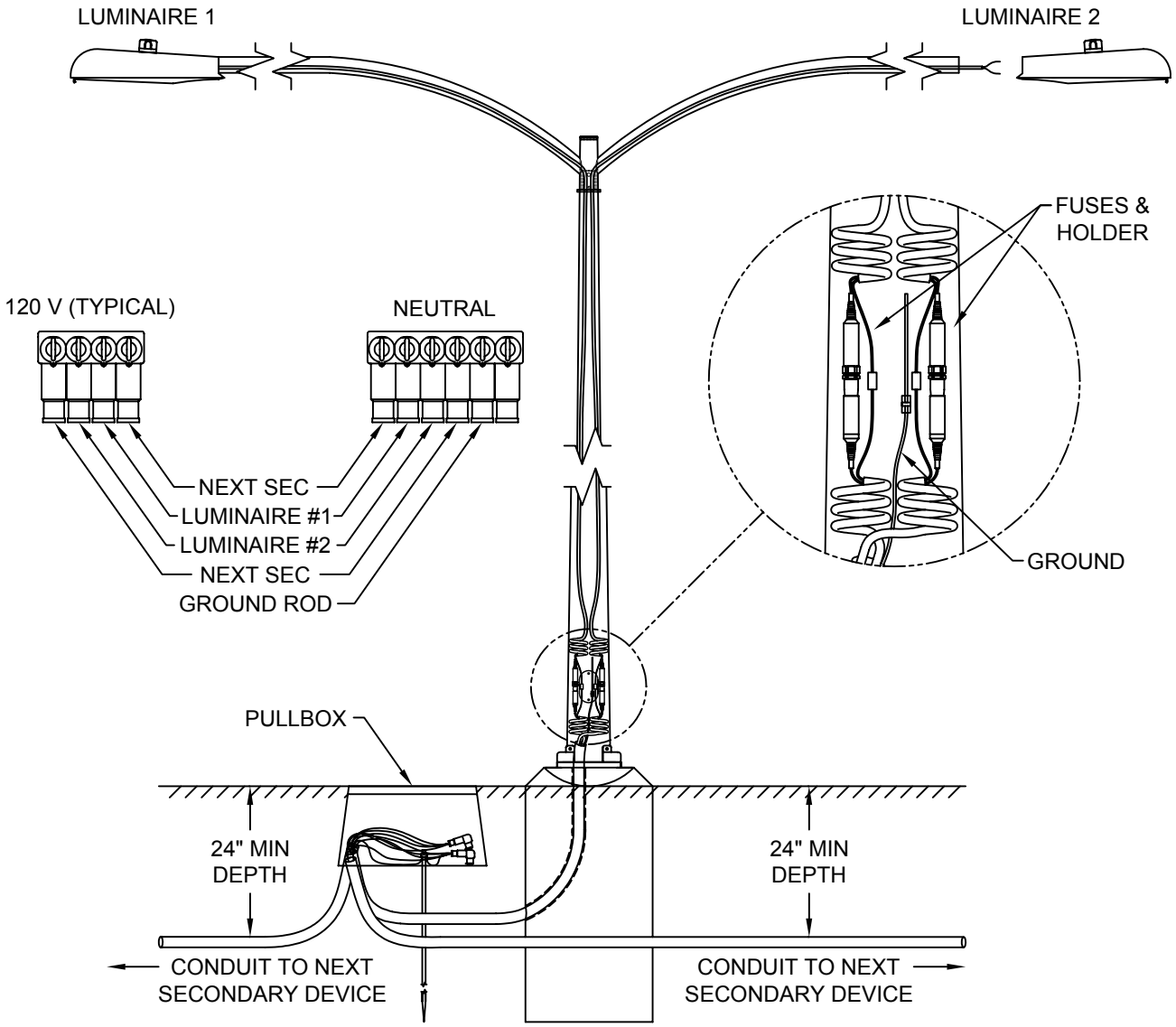

Notes:

1. In triplex wire configurations, each luminaire will be on separate phases. In duplex wire configurations, they will be on same phase.
2. For single luminaire applications, the fuse and wiring for luminaire #2 will not be present.

ODL REFERENCE
POLE HANDHOLE DETAILS

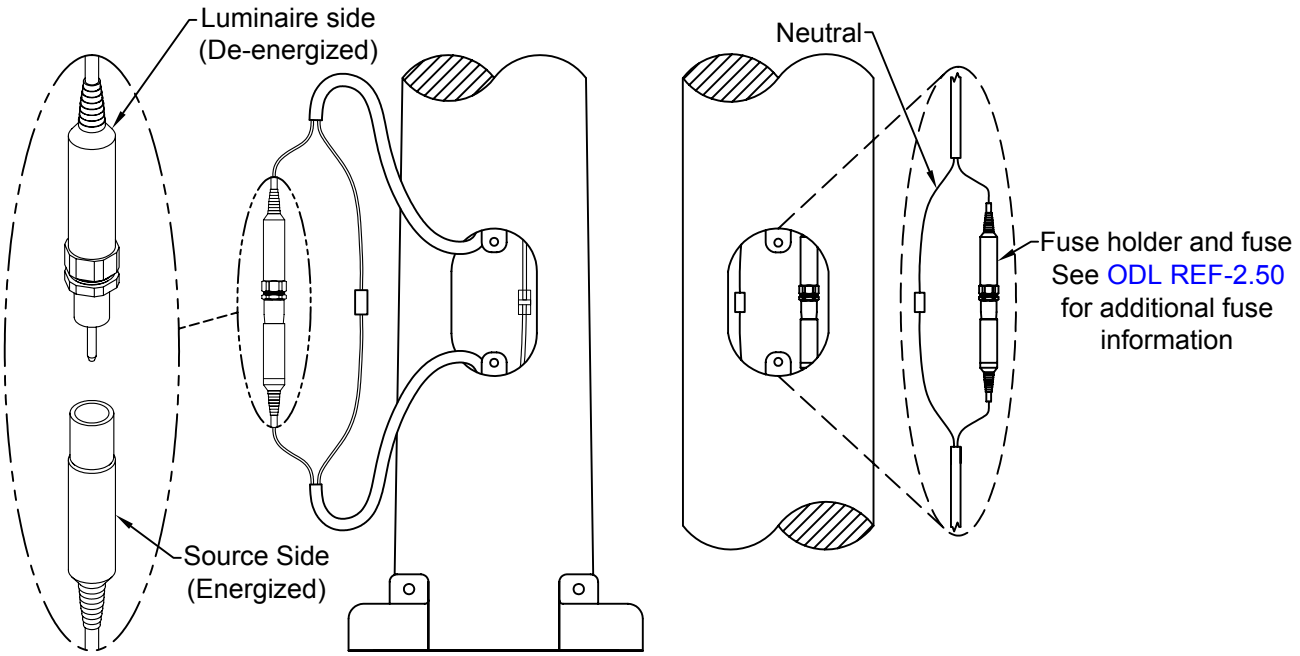

Notes:
1. Streetlights with dual luminaires should have each luminaire fused separately in the handhole.
2. There should be 1 ft of slack to enable the fuse and wiring to be removed from handhole for maintenance.

ODL CONSTRUCTION
FUSE AND TERMINAL BLOCK CONNECTION GUIDE

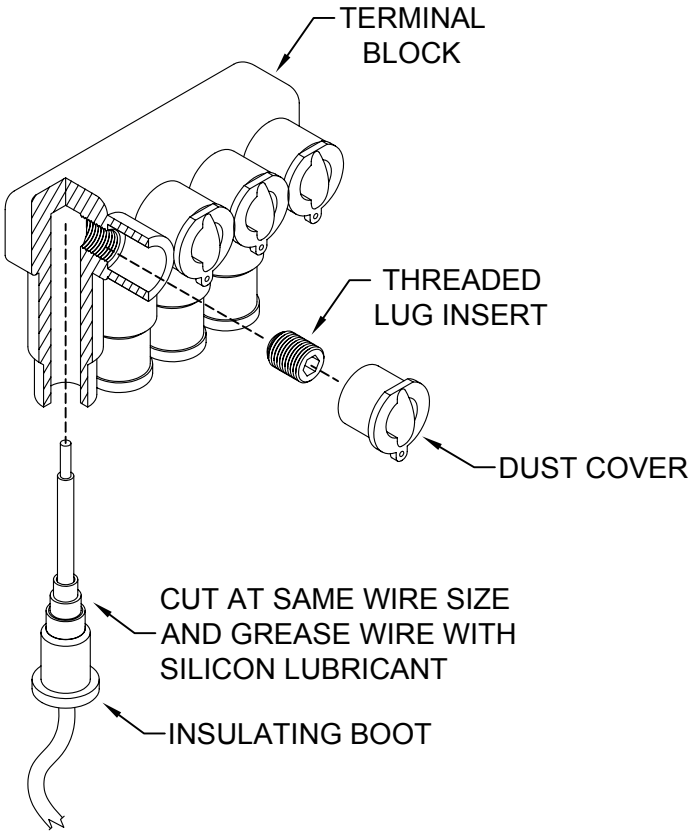

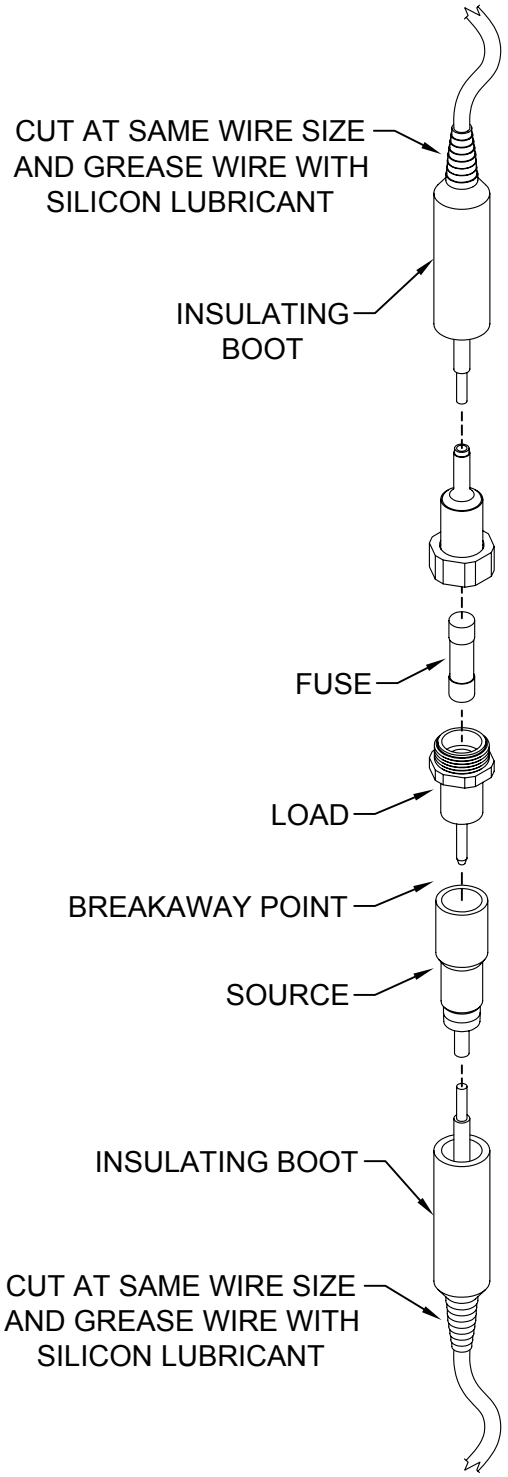

Wire Type	Wire Size O.D. (in)
#12 Cu	0.120
#6 Cu	0.307
#4 Cu	0.354
#4 Al	0.354
1/0 Al	0.530

Notes:

1. Proper installation is required for watertight seal. The wire should be tight when going through insulating boot and a spray-on silicon lubricant should be used to facilitate installation. Loose wires through insulating boot are unacceptable.

ODL CONSTRUCTION
DUPLEX STREETLIGHT PADMOUNT
TRANSFORMER FEED

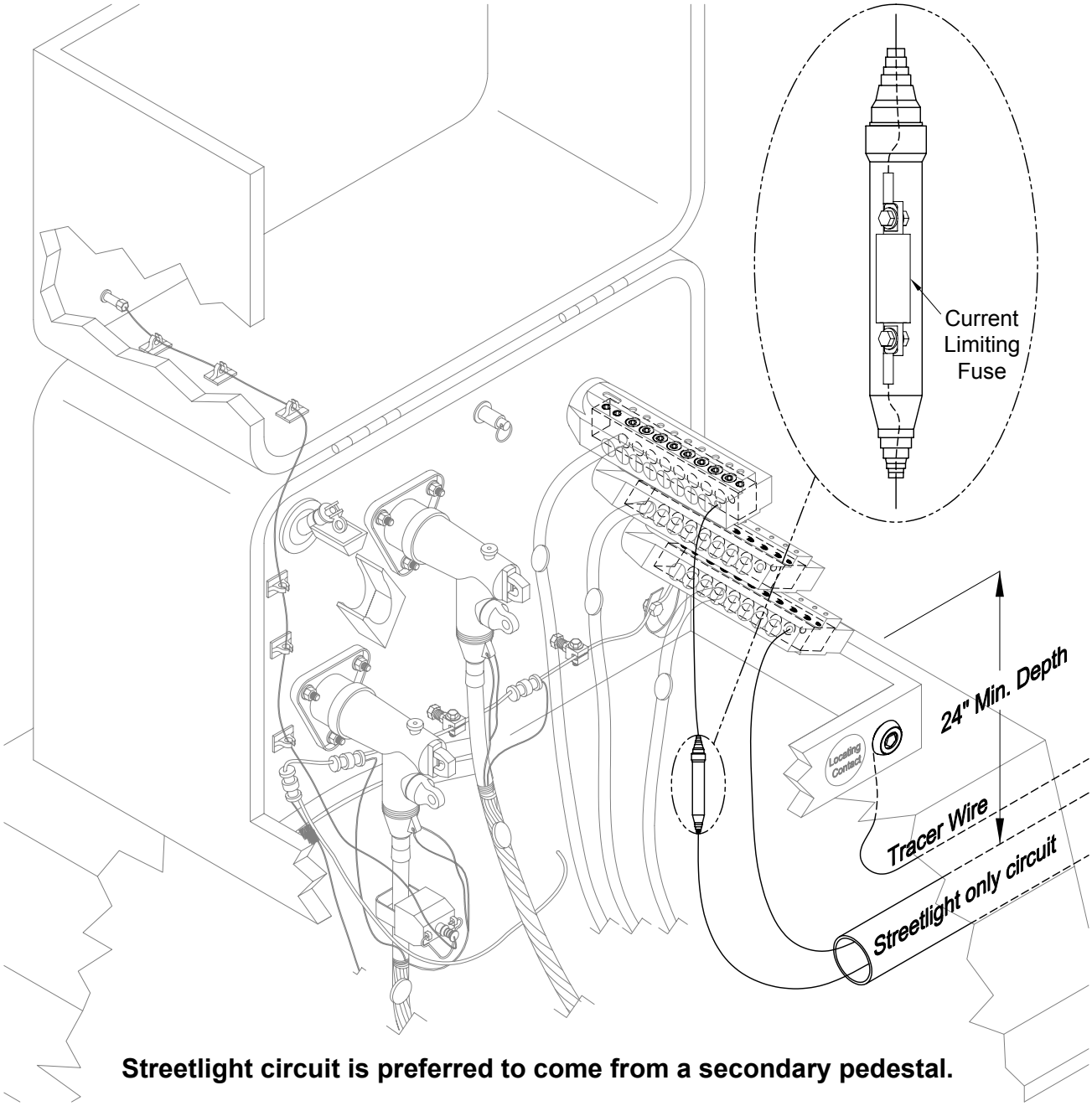

Streetlight circuit is preferred to come from a secondary pedestal.

Notes:
1. For additional information on Padmount Transformer, see UG Design and Construction Manual Section-O.
2. For Triplex Streetlight Padmount Transformer configuration, see page ODL CONST-J.45.
3. For current limiting fuses see ODL REF-2.60. For other fusing see ODL REF-2.50 and ODL REF-2.70.
4. For streetlighting cables and conductors, see page ODL REF-2.30.

ODL CONSTRUCTION
TRIPLEX STREETLIGHT PADMOUNT
TRANSFORMER FEED

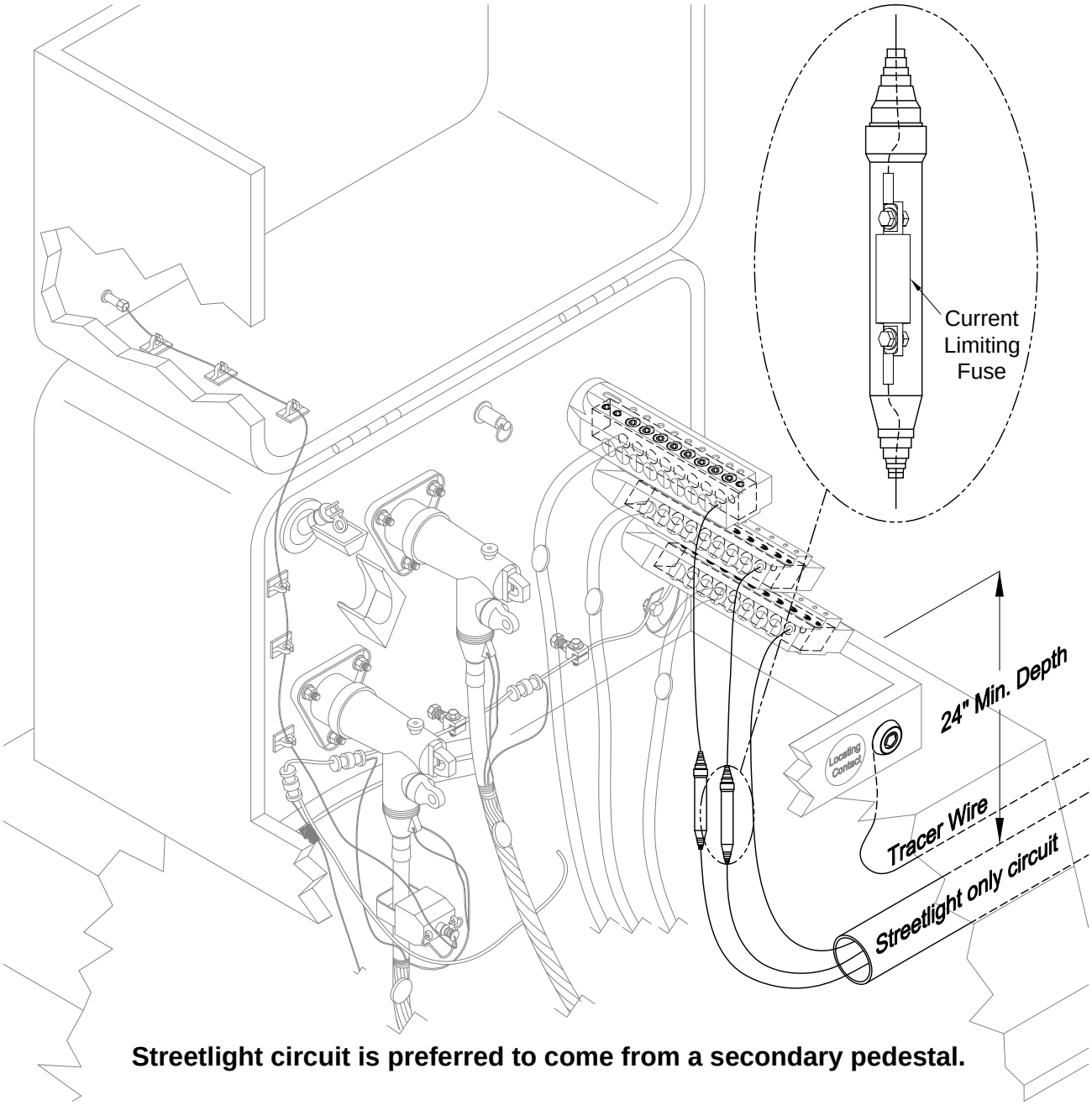

Streetlight circuit is preferred to come from a secondary pedestal.

Notes:

1. For additional information on Padmount Transformer, see UG Design and Construction Manual Section-O.
2. For Duplex Streetlight Padmount Transformer configuration, see page ODL CONST-J.40.
3. For current limiting fuses see ODL REF-2.60. For other fusing see ODL REF-2.50 and ODL REF-2.70.
4. For streetlighting cables and conductors, see page ODL REF-2.30.

ODL CONSTRUCTION
DUPLEX STREETLIGHT PEDESTAL FEED

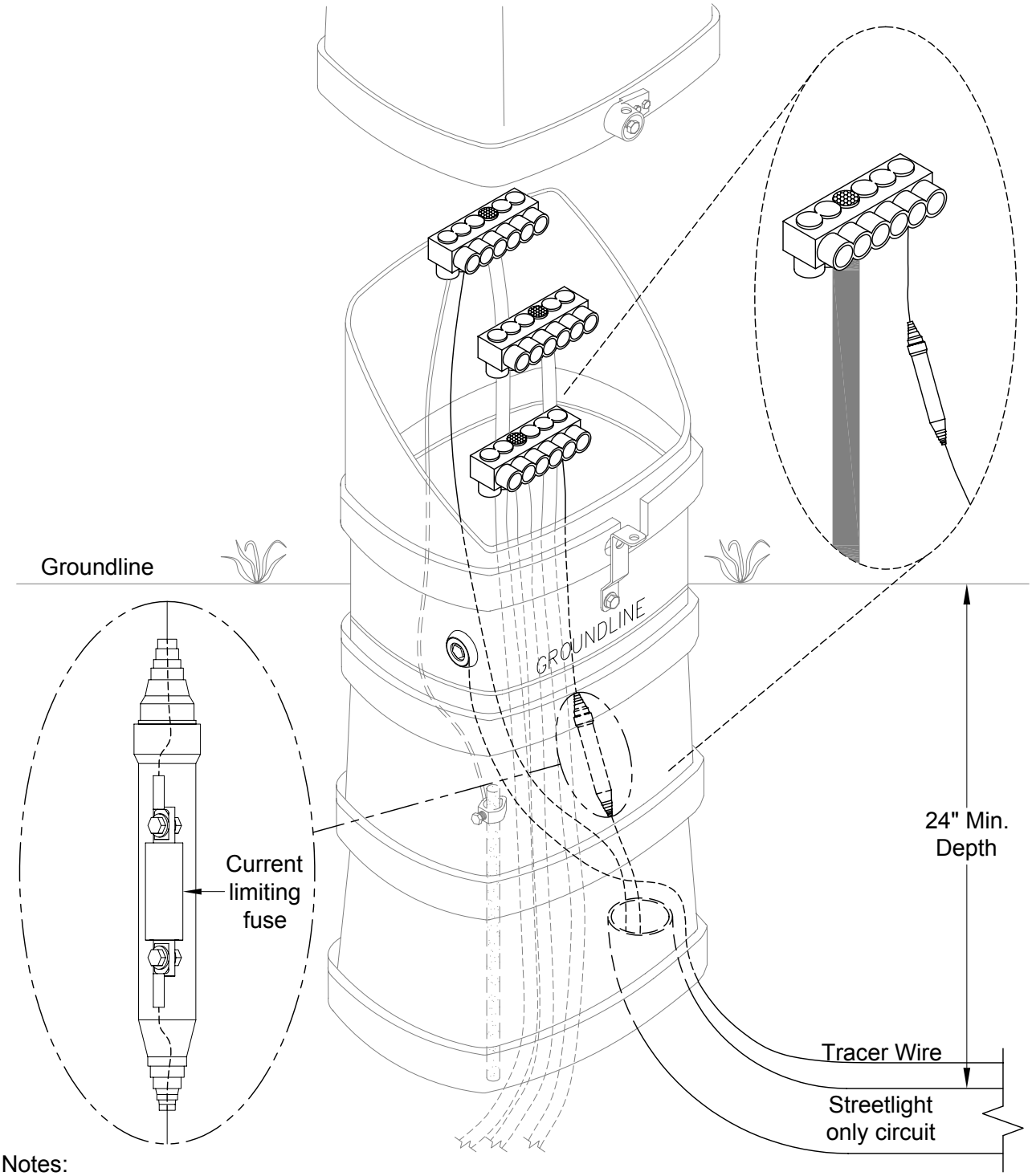

Notes:

1. For additional information on secondary pedestals, see UG Design and Construction manual N-3.
2. For Triplex streetlight pedestal configuration, see ODL CONST-J.55.
3. For current limiting fusing, see ODL REF-2.60. For other fusing, see ODL REF-2.50 and ODL REF-2.70.
4. For streetlighting cables and conductors, see page ODL REF-2.30.

ODL CONSTRUCTION
TRIPLEX STREETLIGHT PEDESTAL FEED

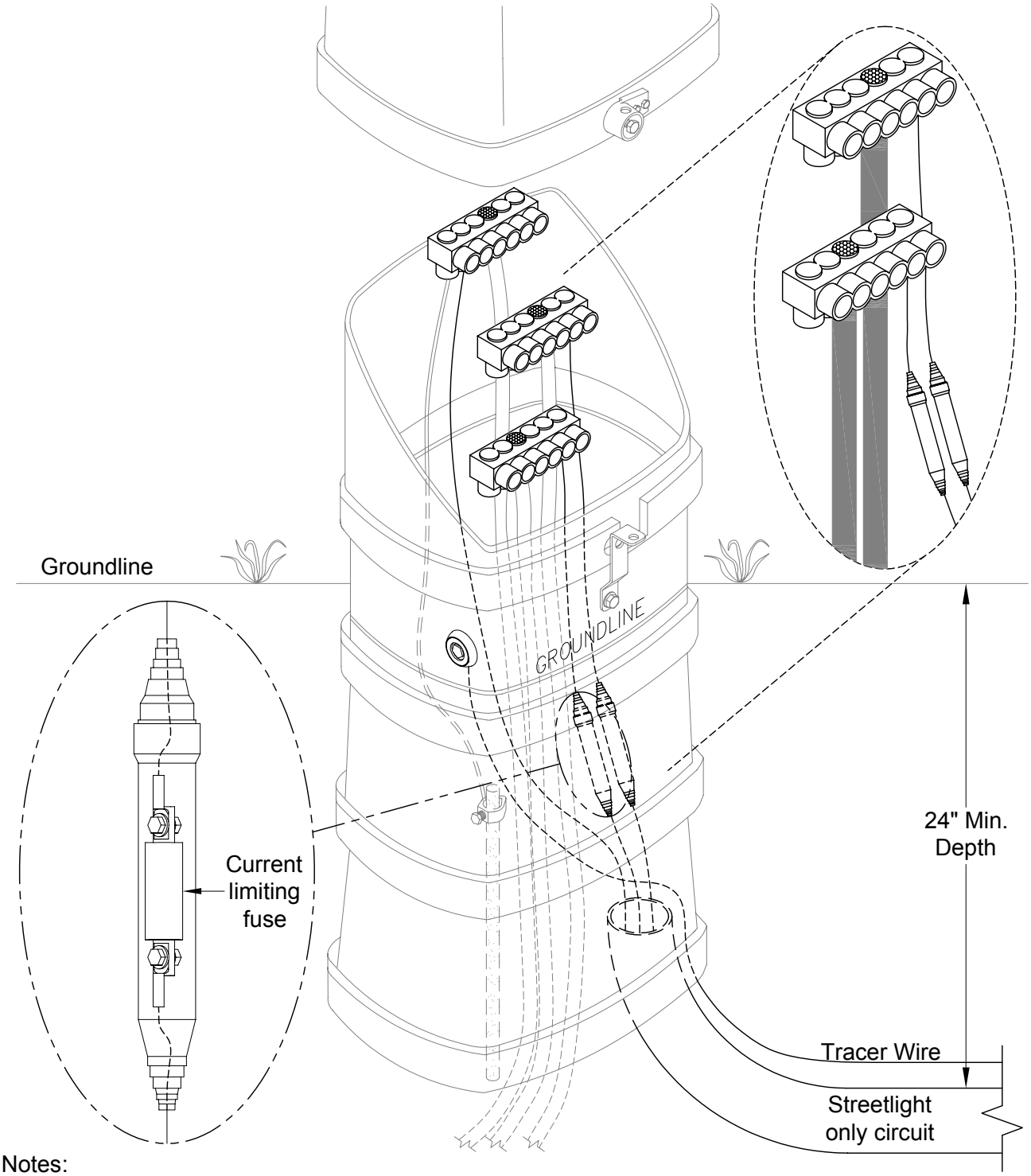

Notes:

1. For additional information on secondary pedestals, see UG Design and Construction Manual N-3.
2. For Duplex streetlight pedestal configuration, see ODL CONST-J.50.
3. For current limiting fusing, see ODL REF-2.60. For other fusing, see ODL REF-2.50 and ODL REF-2.70.
4. For streetlighting cables and conductors, see page ODL REF-2.30.

ODL CONSTRUCTION
OVERHEAD TO UNDERGROUND
STREETLIGHT FEED

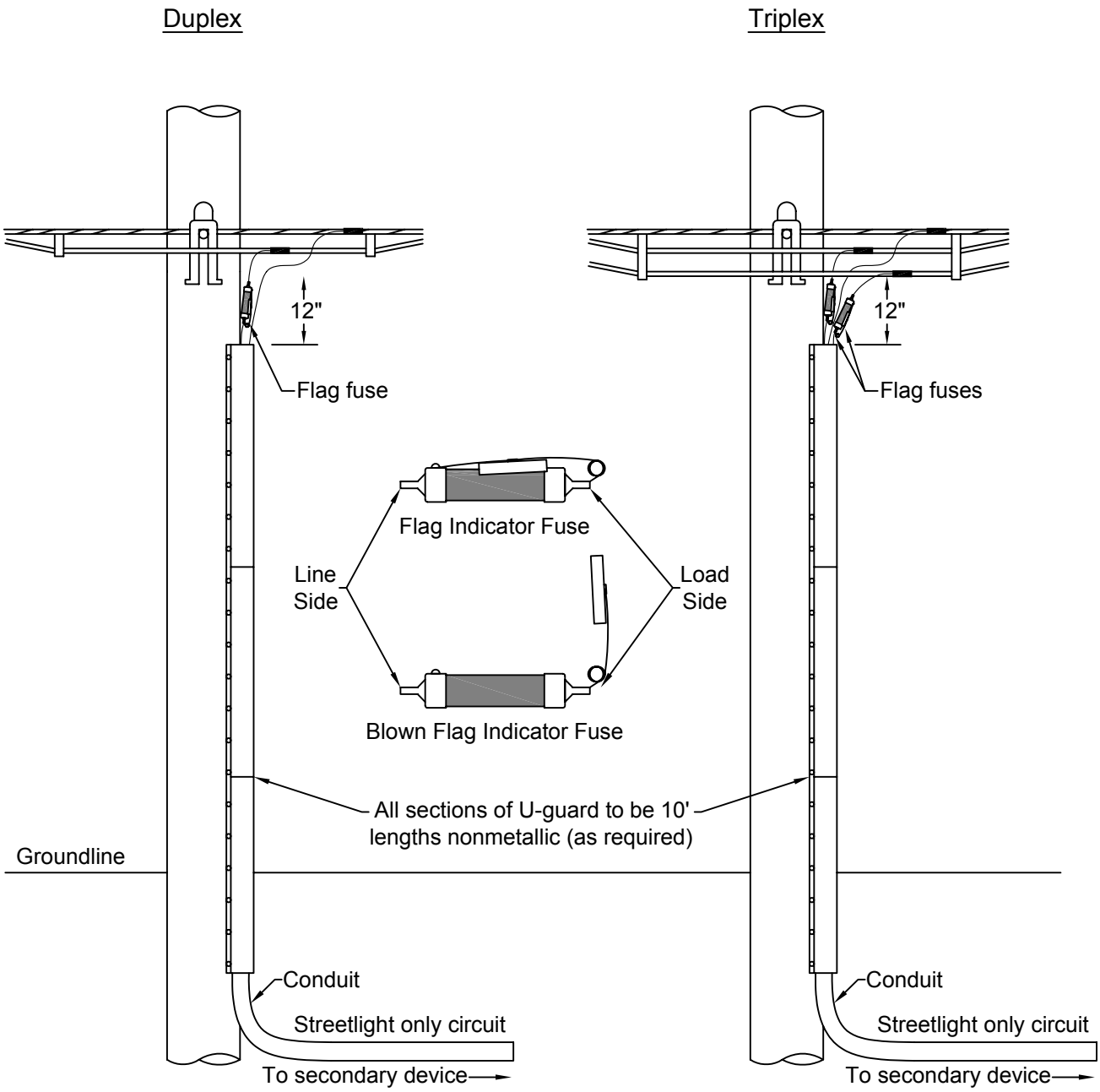

Notes:

1. For streetlight circuits only. If circuit serves distribution customers, fuse streetlight circuit at pedestal. See page ODL CONST-J.50 and ODL CONST-J.55.
2. See page ODL REF-2.70 for flag indicator fuse sizing. For other fusing, see ODL REF-2.50 and ODL REF-2.60.
3. See UG Design and Construction Manual Section-N for underground secondary design.
4. For streetlight cables and conductors, see page ODL REF-2.30.

ODL CONSTRUCTION
STREETLIGHT RELAY

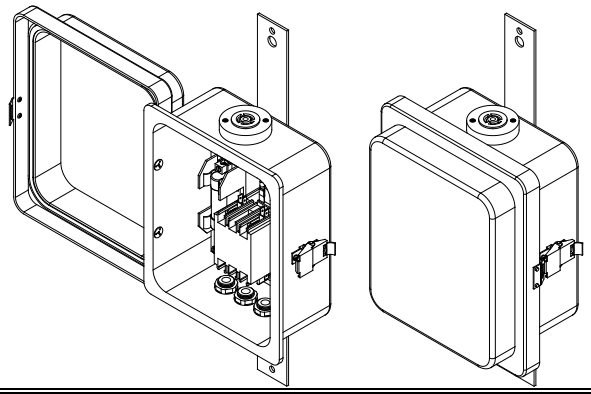

Streetlight Relay			
Description:	**C/U**	**Cat ID**	**Color**
Relay, for streetlight control, Normal Open, Single-Pole/Single-Throw (SPST), 60 A, 120 V, no photo control receptacle, NEMA 4 enclosure	**ESERNP60A120**	54342	Grey
Relay, for streetlight control, Normal Open, Single-Pole/Single-Throw (SPST), 60 A, 120/240 V, photo control receptacle included, NEMA 4 enclosure	**ESER60A120/240**	54343	Grey
Relay, streetlight control, Normal Open, Double-Pole/Double-Throw (DPDT), 60 A, 208-240 V, photo control receptacle included, NEMA 4 enclosure	**ESER60A240**	77014	Grey

Relays are used when controlling multiple luminaires from the same control location. Photo controls have Watt and Volt-Ampere limitations. Using a relay with a photo control will enable a larger number of luminaires to be controlled from one central location.

Location of the relay is critical for correct luminaire operation. When a group of luminaires is to be controlled under a bridge or overpass, the relay must be located where it can receive sunlight. If the relay is located under the bridge or overpass in the shade, the photo control will not sense the sunlight and lights will burn for an extended period of time.

If a standard luminaire with a photo control receptacle is present, place a shorting cap in the photo control receptacle. This will allow the relay to control the luminaires from one central location. By using a shorting cap, this allows the luminaire to stay on all the time and the relay will determine when the luminaire will be turned on or turned off.

ODL CONSTRUCTION
STREETLIGHT HORIZONTAL CLEARANCE

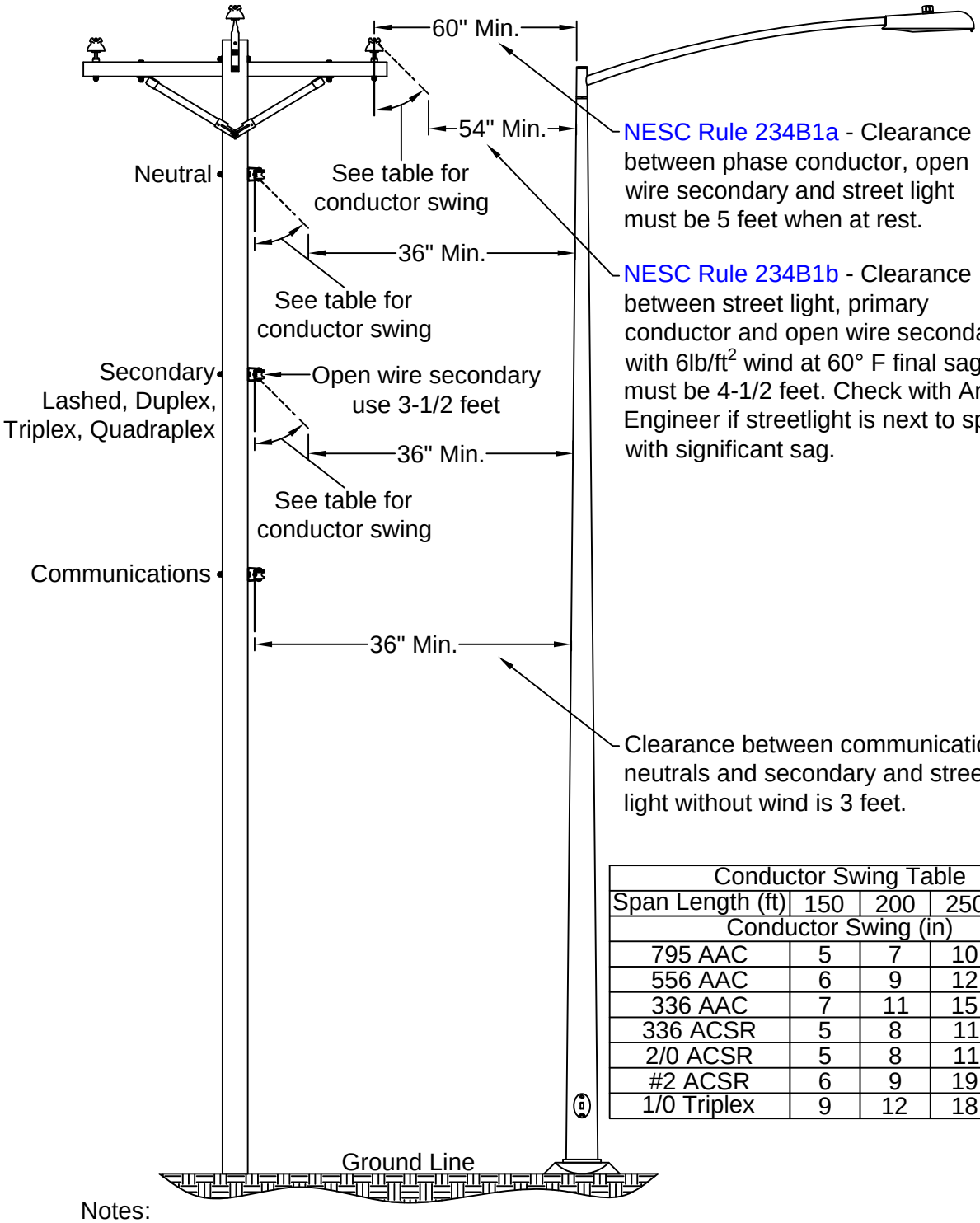

NESC Rule 234B1a - Clearance between phase conductor, open wire secondary and street light must be 5 feet when at rest.

NESC Rule 234B1b - Clearance between street light, primary conductor and open wire secondary with 6lb/ft^2 wind at 60° F final sag must be 4-1/2 feet. Check with Area Engineer if streetlight is next to span with significant sag.

Clearance between communications, neutrals and secondary and street light without wind is 3 feet.

Conductor Swing Table				
Span Length (ft)	150	200	250	300
Conductor Swing (in)				
795 AAC	5	7	10	12
556 AAC	6	9	12	16
336 AAC	7	11	15	20
336 ACSR	5	8	11	15
2/0 ACSR	5	8	11	15
#2 ACSR	6	9	19	35
1/0 Triplex	9	12	18	

Notes:

1. A separation of 7-1/2 feet is sufficient for most spans when conductor is displaced by wind. Less clearance is needed when not at midspan or spans and sags are reduced.
2. See page K-31 for sag change along length of span.

ODL CONSTRUCTION
STREETLIGHT VERTICAL CLEARANCE

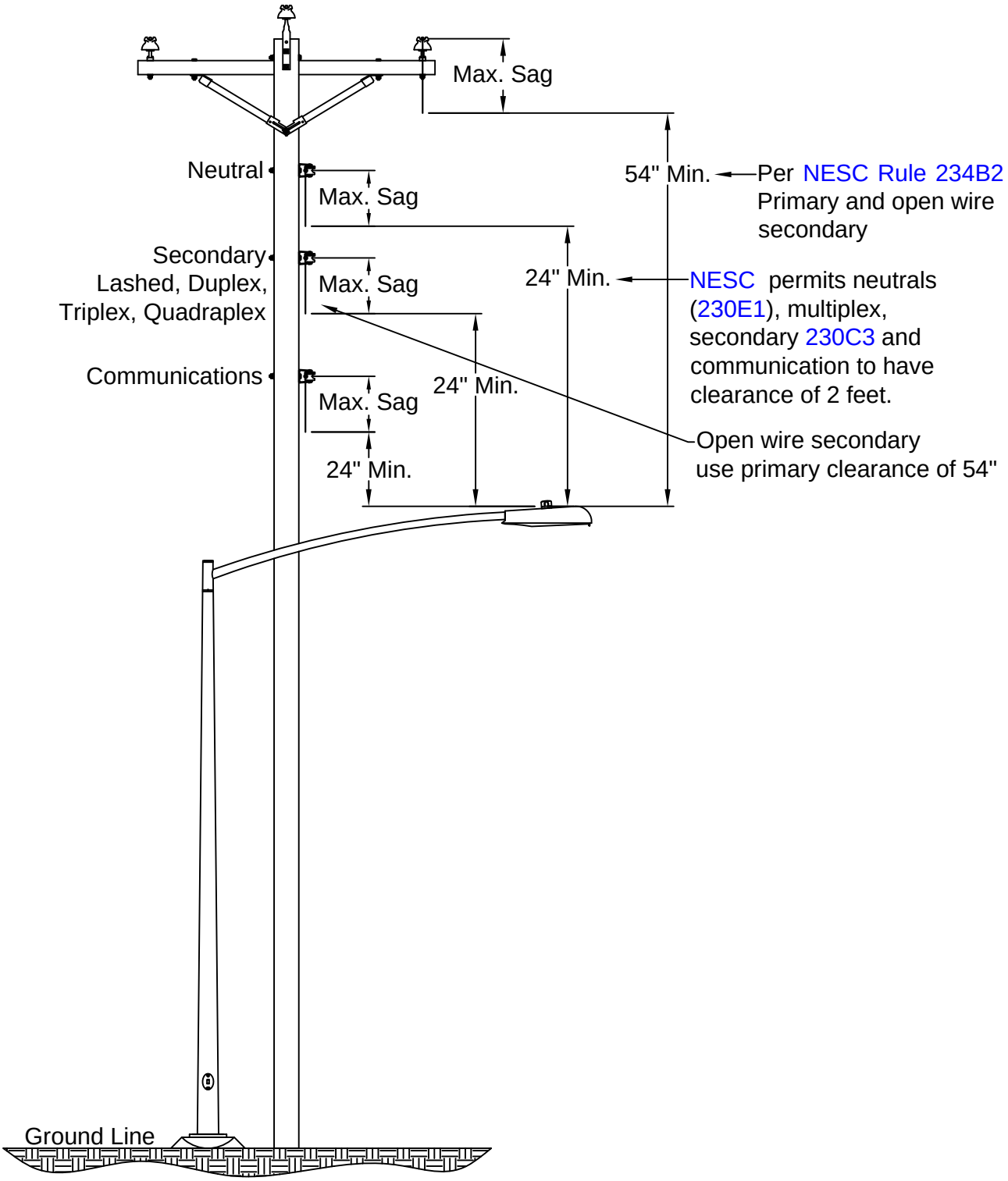

Notes:

1. Clearances are to be applied at maximum sag conditions pages K-28, K-28.50 and K-29.

ODL CONSTRUCTION
WALL AND CEILING
LUMINAIRE MOUNTED INSTALLATION

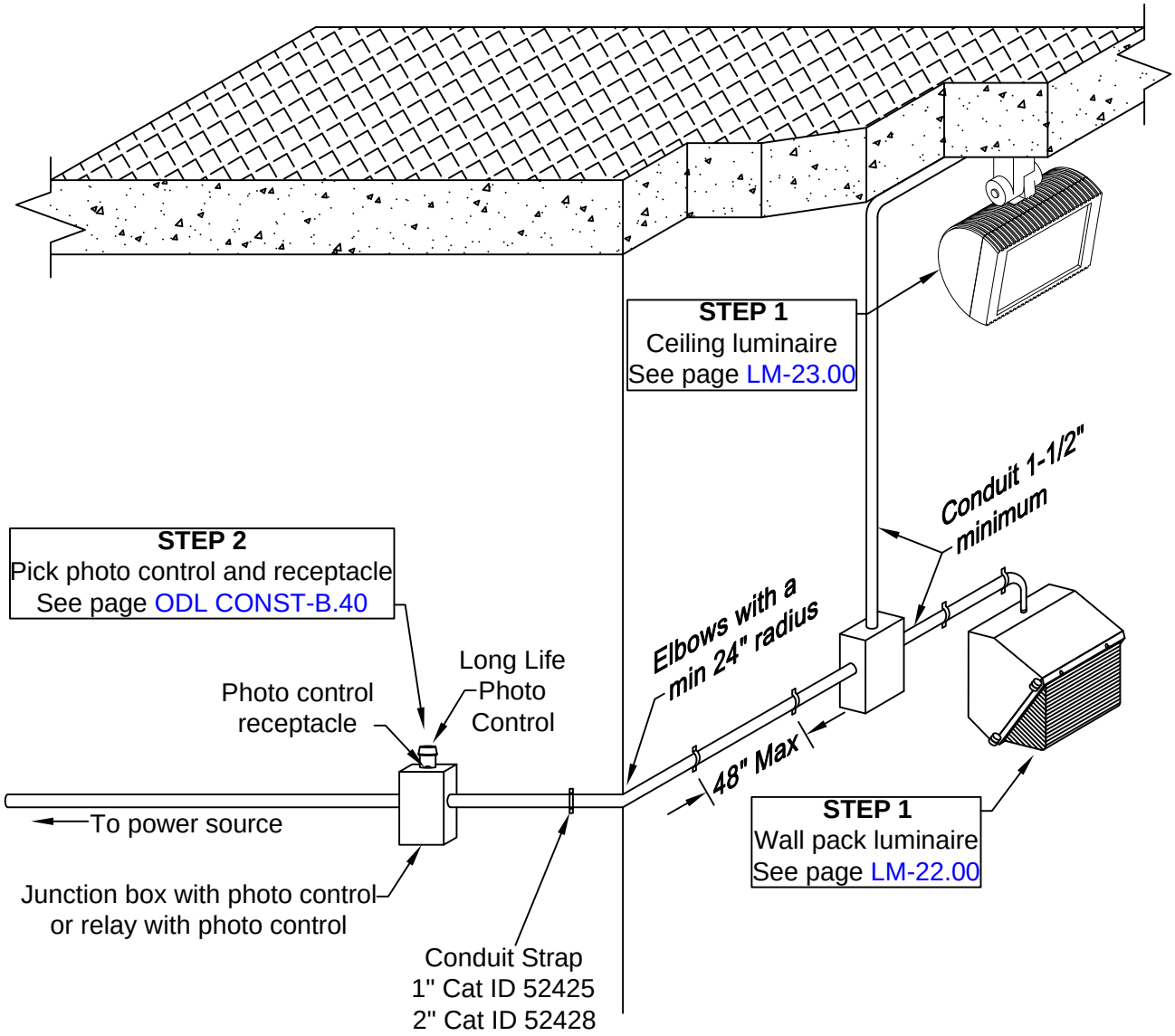

Notes:

1. Wall Pack and Ceiling Lighting is for use under structures.
2. Where possible, photo control is to face North on North side of structure. Watch out for other light sources. See page ODL CONST-B.40 for photo control guidance.
3. The photo control shall be mounted to the structure on a junction box or a bracket in a location between the power source and luminaires.
4. If the photo control is controlling more than 1000 W or 1800 VA, a relay with a three-prong, twist-lock photo control combination shall be used for loads up to 60 A. See page ODL REF-5.10 for relay guidance.

ODL CONSTRUCTION
WALL AND CEILING
LUMINAIRE AND RELAY BOX PLACEMENT

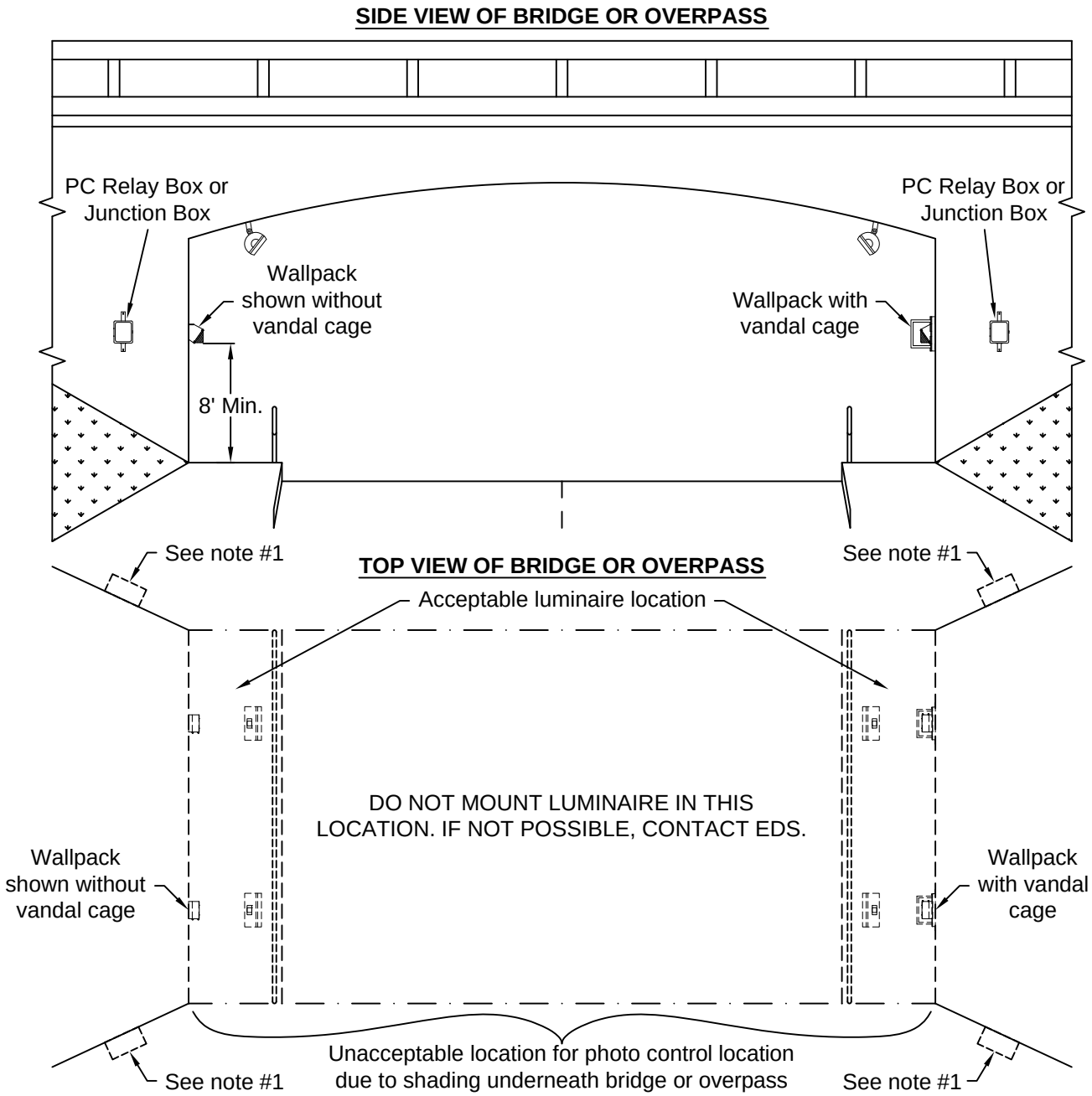

Notes:

1. Photo control relays or other photo control options (if required) must be set in a location that receives sufficient sunlight to operate properly. Placing under obstructions such as bridges, buildings, or overpasses is not acceptable.
2. Ceiling-mounted luminaires are best located where they can be serviced with as little traffic impact as possible.
3. Photo control should be positioned to minimize light from other sources (e.g. car headlights, nearby streetlights, etc.) as this will cause misoperation.

ODL CONSTRUCTION
STREETLIGHT POLE GROUNDING
INTERNAL LUG

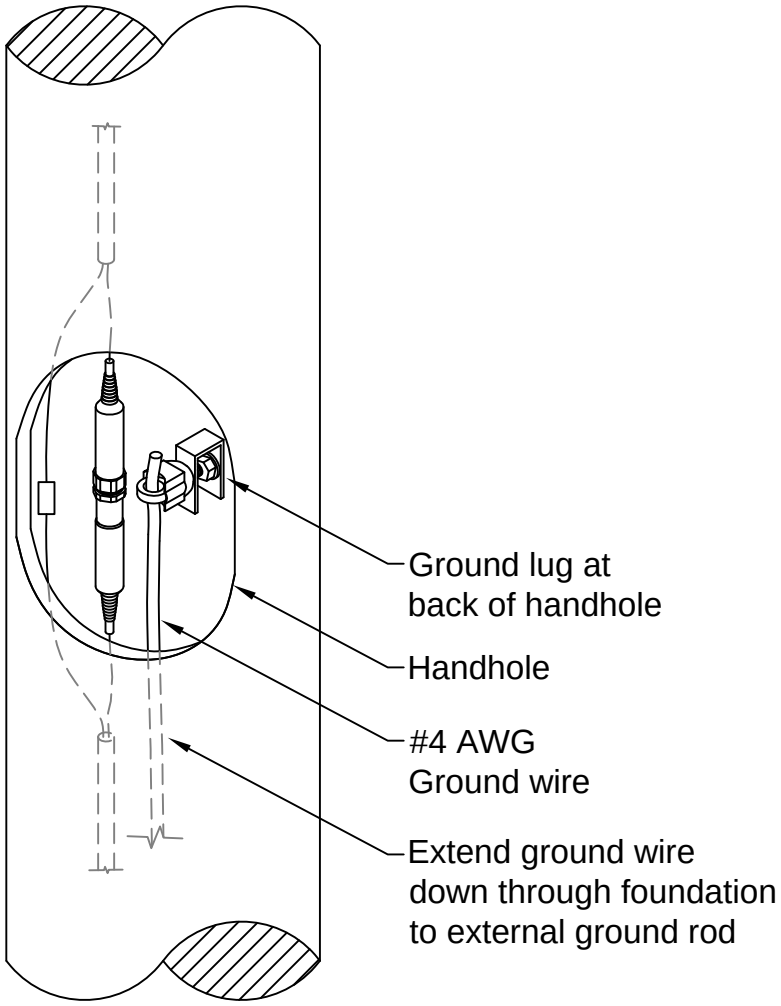

Notes:
1. Metal and concrete poles have grounding provision at back of handhole.
2. Pole ground to be attached to system neutral.

ODL CONSTRUCTION
CONCRETE STREETLIGHT FOUNDATION
INTERNAL GROUND CONNECTION

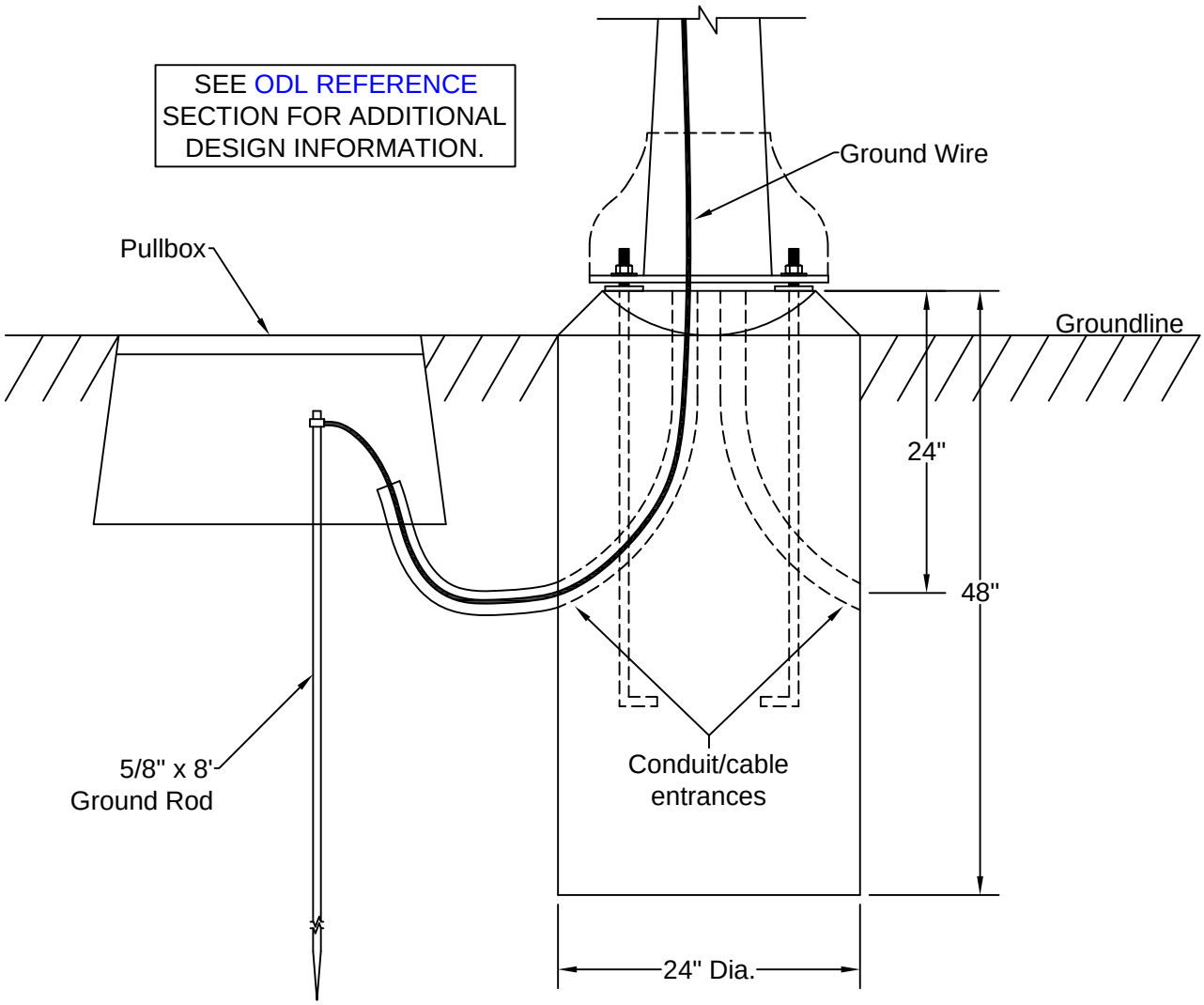

Notes:
1. Ground wire is to be bonded to pole at pole ground lug. See page ODL CONST-K.00.
2. If pole ground is not available, bond to mast arm or luminaire.
3. Some of the installations may have a grounding base plate instead of a ground rod.

ODL CONSTRUCTION
LUMINAIRE AND MAST ARM GROUNDING

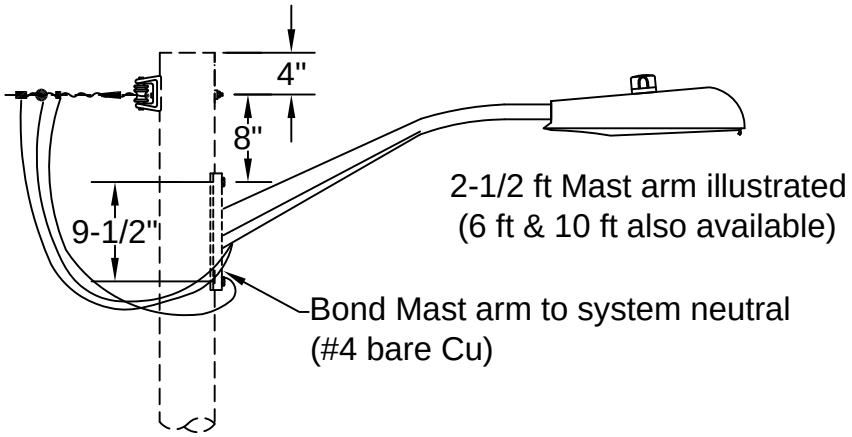

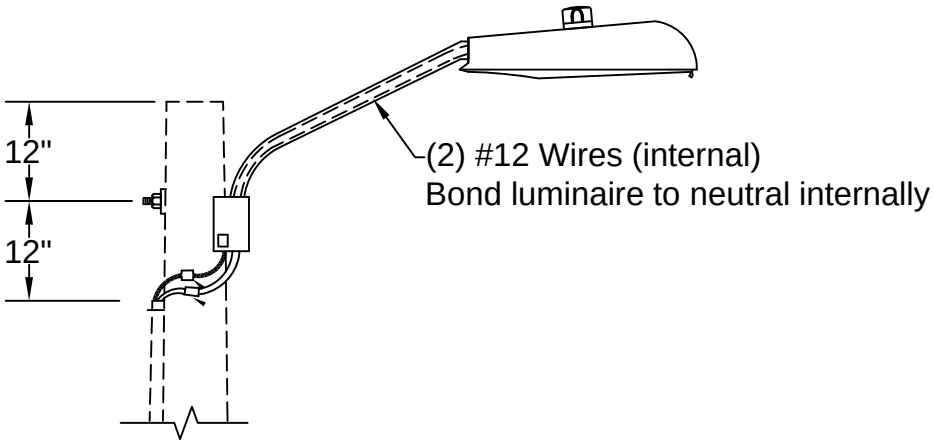

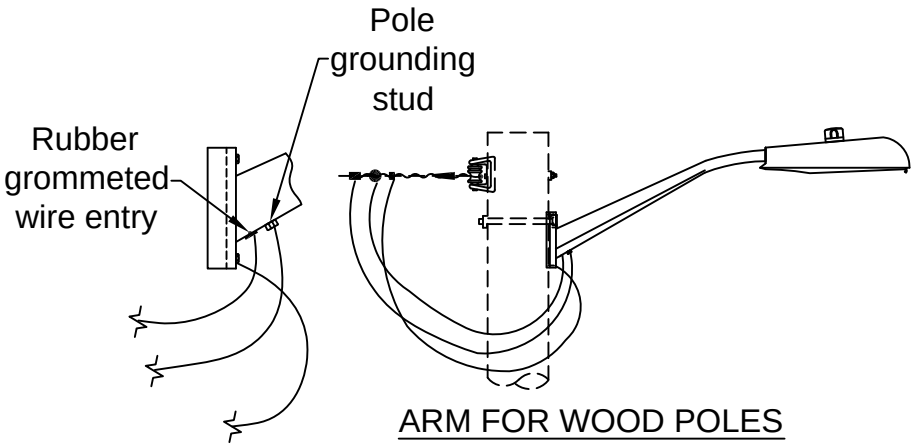

ARM FOR WOOD POLES

ODL CONSTRUCTION
STREETLIGHT CIRCUIT GROUNDING

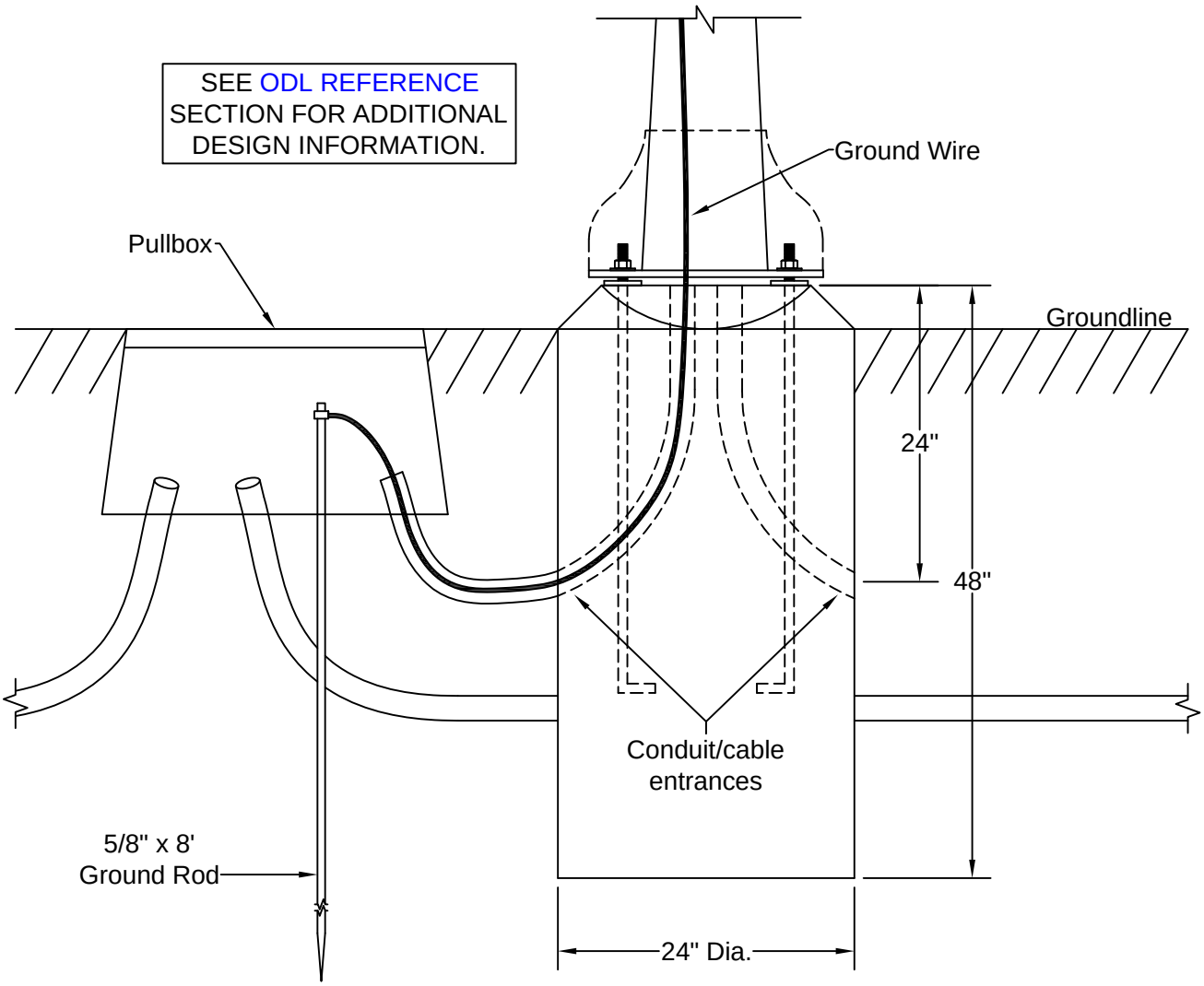

ALL STREETLIGHT CIRCUITS WITH LED LUMINAIRES SHALL BE GROUNDED IN THE PULLBOX NEXT TO THE STREETLIGHT. LED LUMINAIRES ARE MORE VULNERABLE TO SURGES. DUE TO THIS VULNERABILITY THEY CONTAIN A SURGE PROTECTIVE DEVICE (SPD). THE SPD MUST BE GROUNDED AT THE POINT OF INSTALLATION.