LEGEND

- RAMP METERING CONTROLLER CABINET
- PULL BOX (30x48x24)
- PULL BOX (SPECIAL)
- PULL BOX (18x12x18) - INCLUDED IN CONDUIT
- 2" CONDUIT (PLASTIC) OR (BORED) AS SHOWN ON PLANS

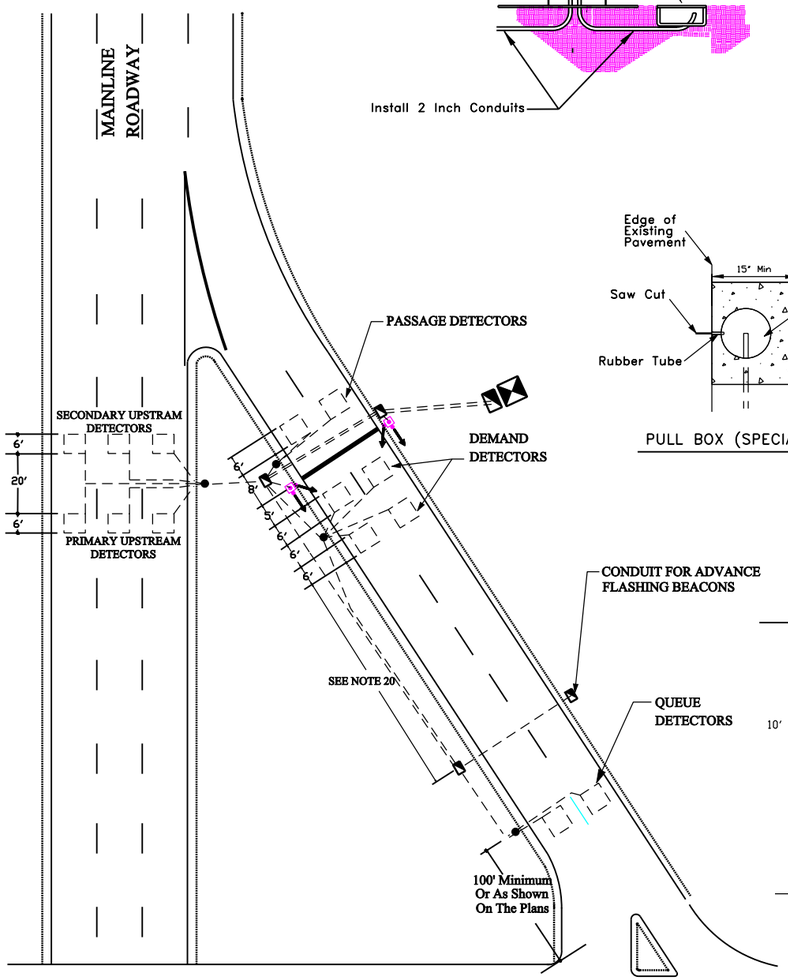

TYPICAL METERED FREEWAY RAMP

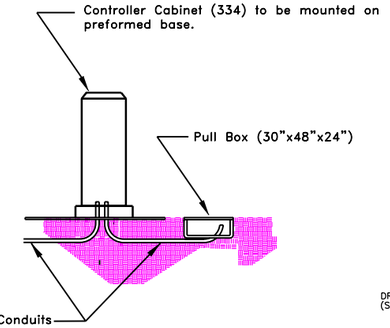

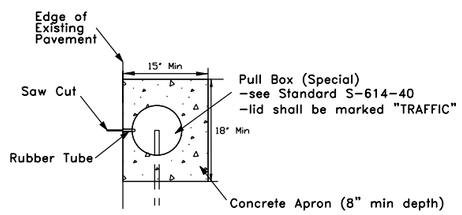

PULL BOX (SPECIAL) DETAIL

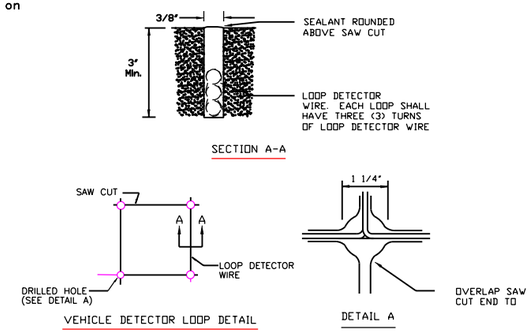

VEHICLE DETECTOR LOOP SAW CUT DETAILS

(FOR USE WITH VINYL TUBING ENCLOSED LOOP DETECTOR WIRE)

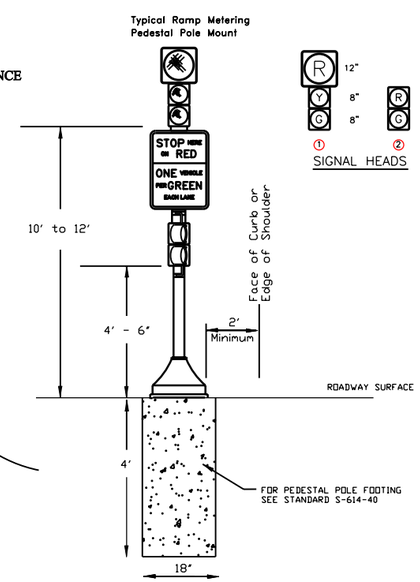

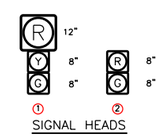

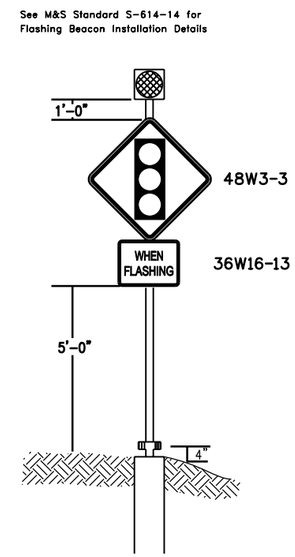

1. All detector loops shall measure as a 6' X 6' square (within 1/2" tolerance).
2. All detector loops shall be centered in the traffic lane.
3. All detector loop slots shall be cut to a minimum depth of 4"
4. Before installation of the wire, all slots shall be cleaned of debris using compressed air or water and the surface of the roadway and slots shall be dried by the use of compressed air.
5. All saw cut loops shall include 3 turns of loop detector wire. The wires shall be seated at the bottom of the saw slot.
6. No more than four loop detector wires shall be placed in a saw slot leading to the edge of roadway.
7. No detector wire splices shall be allowed in the saw slots. All loops shall have continuous detector wiring throughout the pavement.
8. All lead-in wire shall be continuous to the controller cabinet.
9. All loop and loop lead-in wires shall be clearly labeled in each pull box.
10. Prior to the sealing of the saw slots and drill holes, an inductance and leakage test shall be performed. Loop inductance shall measure between 20 and 2500 microhenries. Leakage resistance will be greater than or equal to 100 megohms. Measurements outside of these specifications will be cause for immediate loop replacement.
11. Conduit for lead-in wire off the pavement surface shall be buried at a minimum depth of 3'.
12. Loop sets (two loops in a series) within a single lane shall be separated by 20' resulting in a distance of 26' from leading edge to leading edge (within 1/2" tolerance)
13. For new asphalt surfaces, slots shall be saw cut and detector wire installed prior to laying of the final lift of pavement. For new concrete pavement, preformed loops shall be used, see project plan sheets, project standards and project special provisions.
14. All saw cut corners shall be rounded using a 1 1/4" hole saw drilled to a minimum depth of 4". No 45 degree angled corners will be accepted.
15. The minimum saw cut slot width shall be 3/8".
16. All saw slots and drill holes shall be sealed using an approved loop sealant. Excess sealant shall be removed to avoid unnecessary high spots.
17. Pull boxes shall contain an additional 2' of loop detector wire and lead-in wire.
18. Electrical conduit at ramp metering locations shall be as follows:
    Under the roadway, 2" Electrical Conduit (Bored) - Schedule 80 minimum.
    Elsewhere, 2" Electrical Conduit (Plastic), (Unless otherwise noted on the plans).
19. Some electrical conduit trenchs shown on this sheet shall contain multiple conduits for the separation of electrical power, loop wire and/or fiber optic cable. See project plan sheets for exact number and location of conduit runs.
20. See project plan sheets for location of conduit and Advanced Flashing Beacons.
21. Two-section 8" red and green signal heads shall be "angled in" and shall be equipped with visors that may be positioned to either side of the lens, allowing only the first motorist behind the stop bar to see the signal indication.
22. The special regulatory signs "STOP HERE ON RED ONE VEHICLE PER GREEN" and "STOP HERE ON RED ONE VEHICLE PER GREEN EACH LANE", shall be paid for separately, and are listed on the Tabulation Of Signs sheet. The proper sign for installation is shown on the project plans.
23. Power wiring, loop detector wire and fiber optic cable shall be each installed in a separate conduit as shown on the project plans unless otherwise directed by the Engineer.
24. All Signal heads shall be approved LED type.
25. 18" X 12" X 18" pull boxes needed to complete conduit installation shall be included in the cost of the conduit.
26. Passage detector loops shall be placed 50' from physical gore or as shown on the plans.
27. Contractor shall contact the Regional Signal Supervisor (xxx) xxx-xxxx 48 hours prior to installing loops and 48 hours prior to terminating loops at each location.
28. Loop lead-ins shall run to pull box (special) at the edge of pavement. Concrete apron shall be included in the cost of Pull Box (special).
29. Contractor shall use a 3" strip of backer rod every 3' prior to sealant to ensure that the wire stays at the bottom of the saw cut. The rest of the saw cut shall receive full depth sealant.

Print Date: 6/22/2010	Sheet Revisions	Colorado Department of Transportation	As Constructed
File Name: Ramp Metering Standard.dgn	Date: / Comments / Init.	425 C Corporate Circle, Golden, CO 80401	No Revisions:
Horiz. Scale: Not to Scale / Vert. Scale: As Noted	R-X	Phone: 303-512-5801 FAX: 303-512-5878	Revised:
Unit Information / Unit Leader Initials		HQ ITS Branch AI	Void:

RAMP METERING DETAIL

Designer: BGK	Structure Numbers		Project No./Code
Detailer: BGK			Project Number
Sheet Subset: RM DETAIL	Subset Sheets: 1 of 1		SA
			Sheet Number

scottjk 4:09:17 PM C:\User Data\ITSstandardSpecs\M&S\Ramp Metering Standard.dgn